cablematic

18.4x13CM

1* A

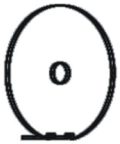

1* B

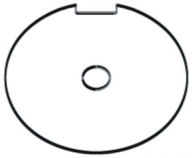

1* B1

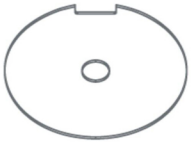

1* B2

1* C

2* D

2* D1

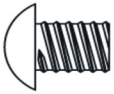

1* E

1* E1

1* F

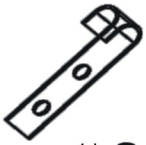

1* G

1.assernble the handle(C+G)on the door by the screws(D+D1)
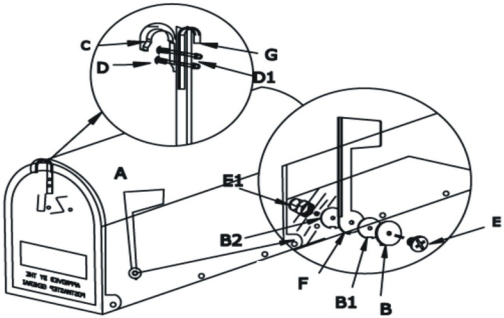
2.assernble the flag(F)on the mailbox by B+B1+B2+E+E1