BUY ON
www.cablematic.com

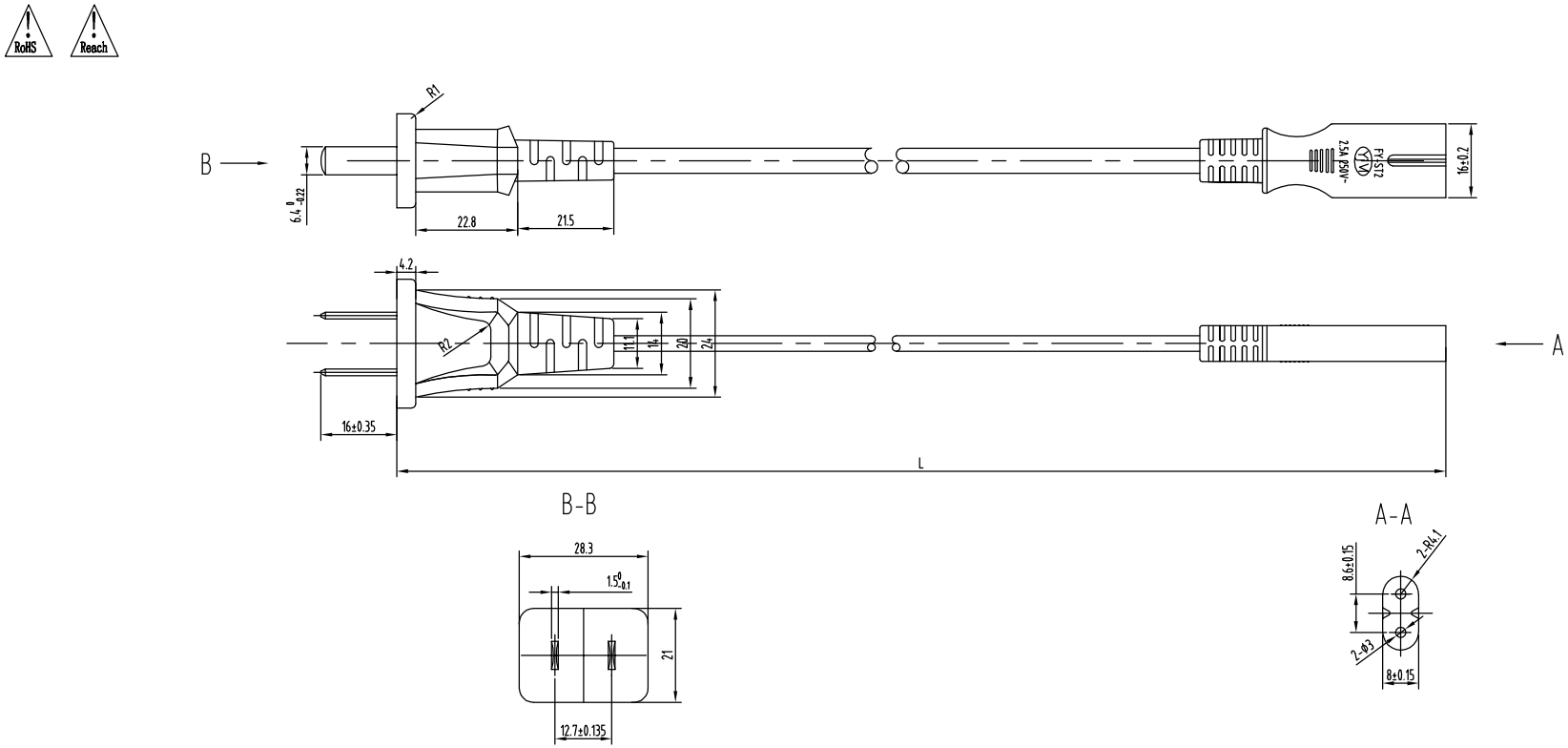

Notes;

1.Plug: C2-6 6A 250V~ Clear injuection, no scrath and dirt
2.Cable:60227IEC52(RVV) 2X0.75 mm² Jacket(3.5±0.1)X(5.7±0.1) Conductor42×0.15,
3.Test: Hi-Pot : Inner Voltage AC2500V/1S、External Voltage AC6000V/1S、current leakage 1mA, insulation resistance no less than 50MΩ, no strike out

1	CL46		1800±10mm	Black
Item	Customer Model	Model/No.	Length(mm)	Color

P.N		Item				Drw.N	
Dre By						Date	2015.3.23
Check By		.x±0.15 .x'±0.15 .xx±0.25 .xx'±0.25 .xxx±0.38 .xxx'±0.38		比例	1 : 1		mm
				投影			