REVISION NO.	REVISION NOTE	MADE BY	APPROVED BY
# 00	Fixed	Ipunk	

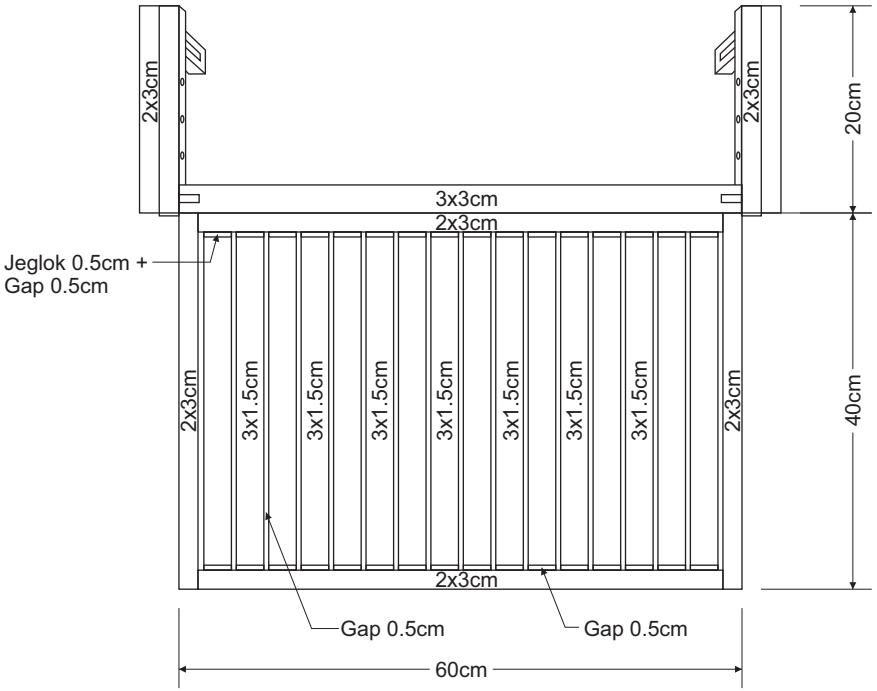

Top View

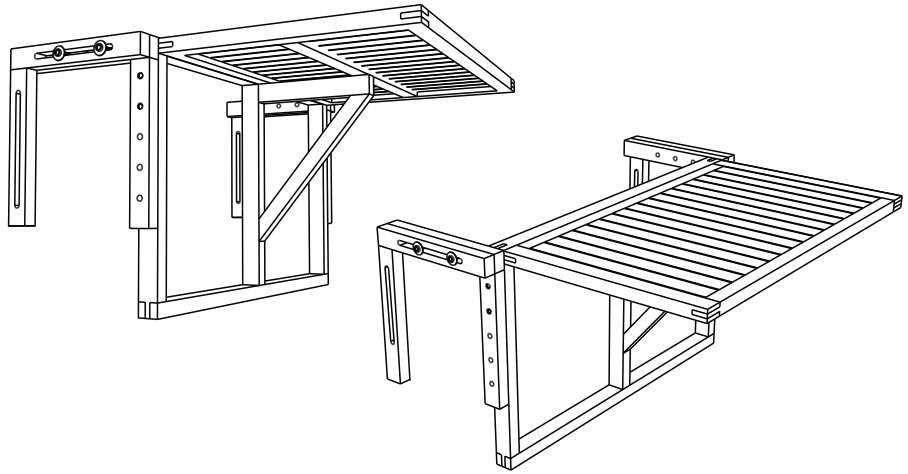

Perspective

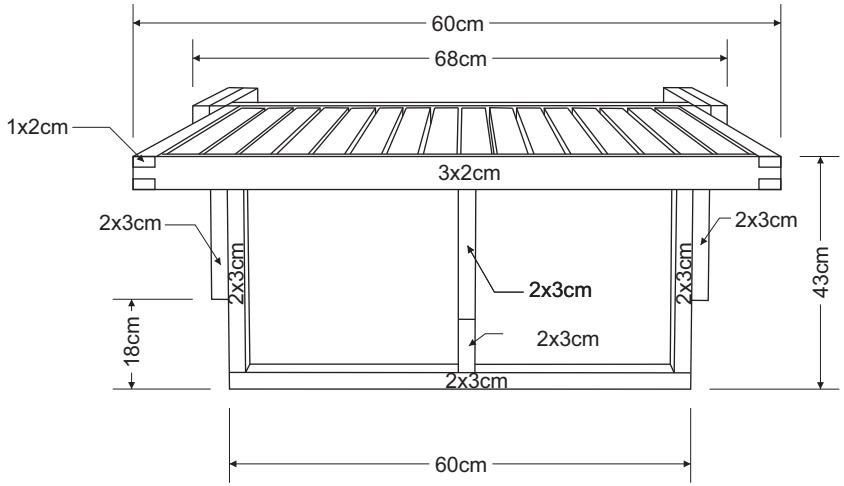

Front View

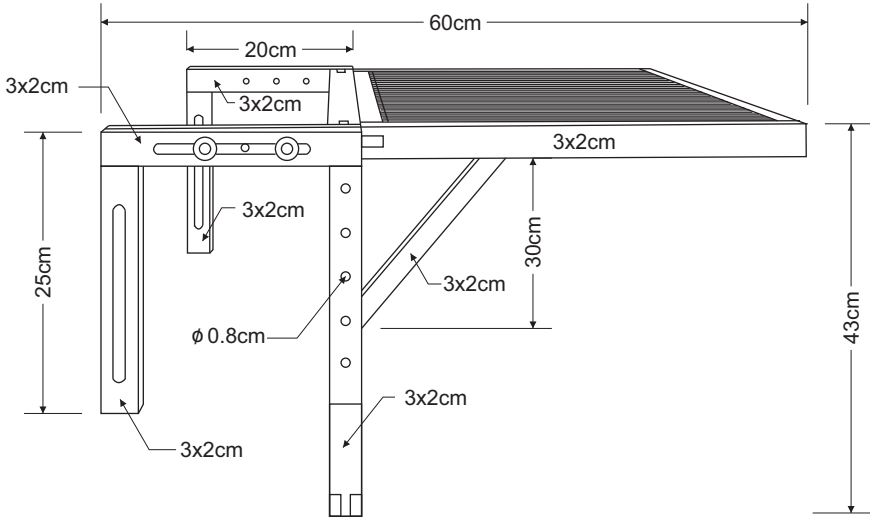

Side View

CODE	DIMENSION	DIVISION
KZ 151	H43xW68xD60cm	Teak and SPA
DESCRIPTION	**MATERIAL**	**FINISHING**
Balcony Table	Teak	Finishing

cablematic