WEIGHT	CUSTOMER NO:	REMARK
M1-113000g	LN62	Cablematic

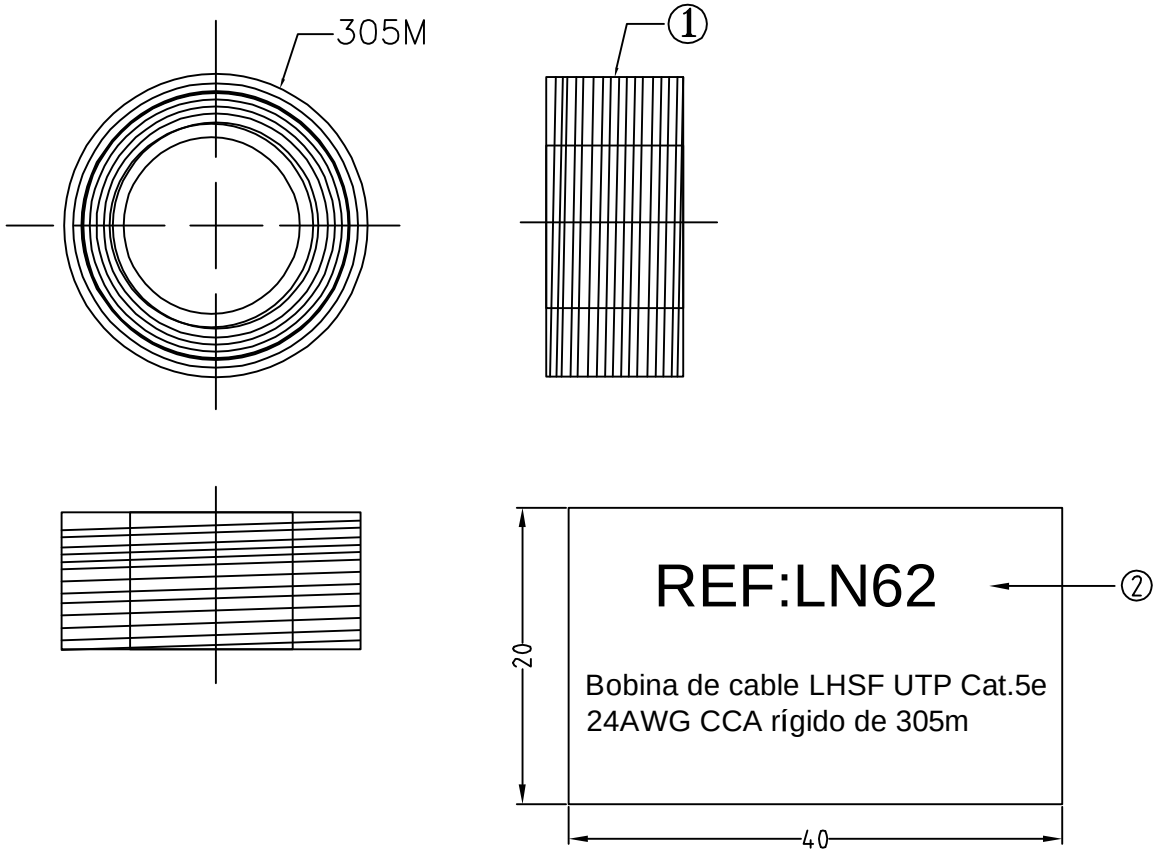

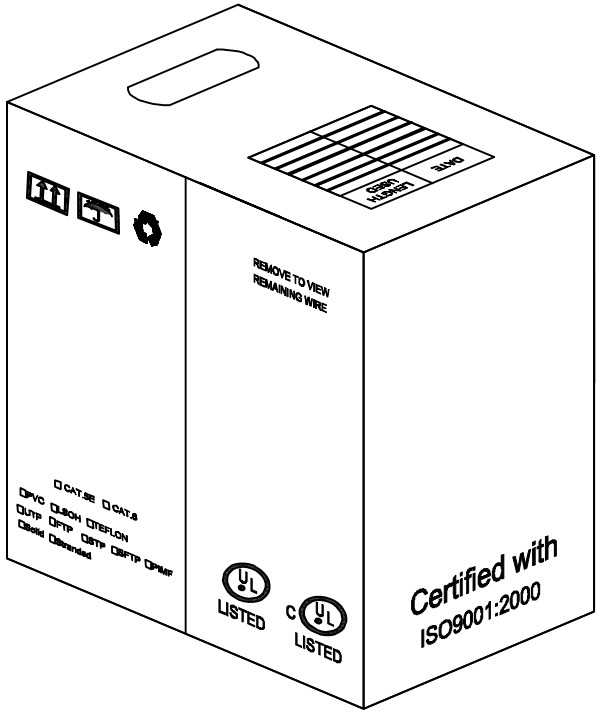

CABLE:

1) CAT.5E UTP 24#4P(1/0.50) CCA SOLID TYPE OD:5.5MM LSOH LIGHT GRAY(2005) PRINT:1M,2M.....305M RoHS

2) NEUTRAL EASY BOX

REV.	ECR	DESCRIPTION	C.N.	DATE
A		FIRST EDITION	• ▬ ••	04/08/10

THESE DRAWINGS AND SPECIFICATIONS ARE THE PROPERTY OF WIRETEK COMPUTER LIMITED AND SHALL NOT BE REPRODUCED COPIED OR USED IN ANY MANNER WITHOUT THE PRIOR WRITTEN CONSENT OF WIRETEK COMPUTER LIMITED.

UNLESS OTHERWISE SPECIFIDE:
DIMENSIONS ARE IN MILLIMETERS
ANGULAR TOLERANCE: ±1.0°

DIMENSIONS	TOLERANCE
0.00 TO 30.00mm	±0.10mm
30.01 TO 80.00mm	±0.13mm
80.01 TO 150.00mm	±0.15mm
150.01mm ↑	±0.20mm

MATERIAL
FINISH

TITLE: UTP CABLE

CHKD. | CONF.
DR. • ▬ •• | APPD.

PART NO. 2615-1220

SCALE | SHEET 1/1 | UNIT MM | SIZE A4 | REV. A

WFM-ED-07B