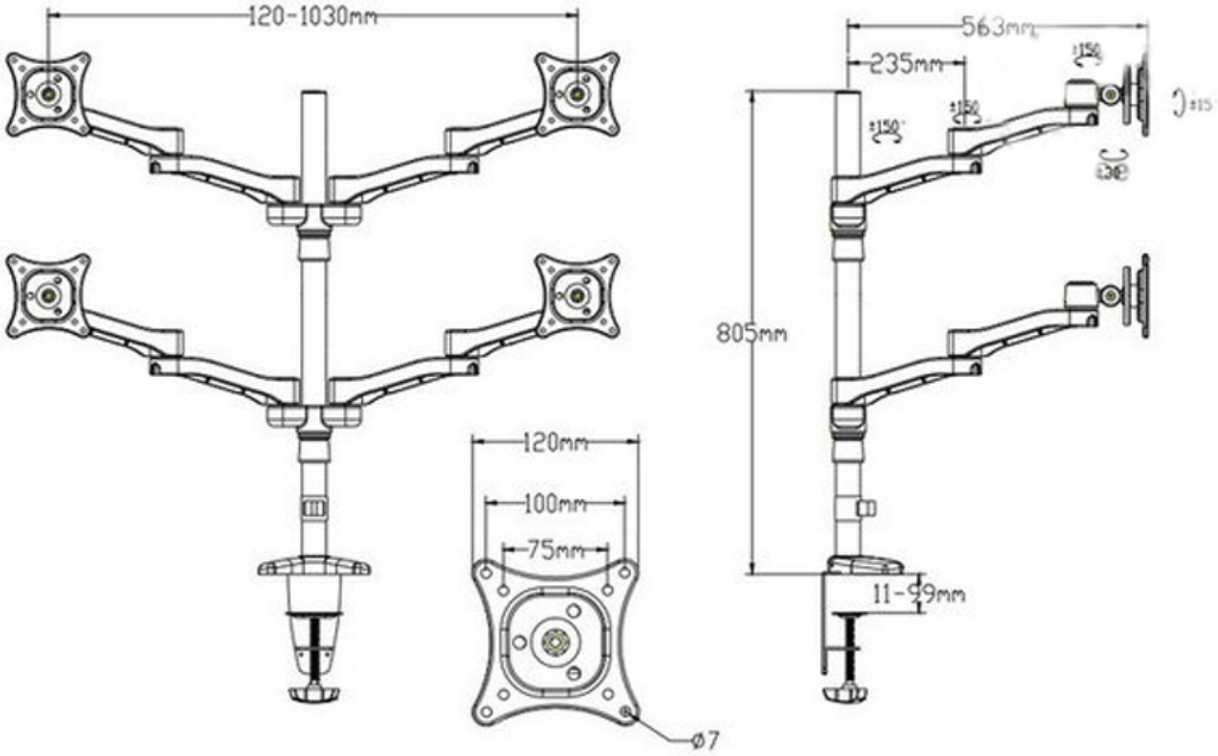

BUY ON
www.cablematic.com