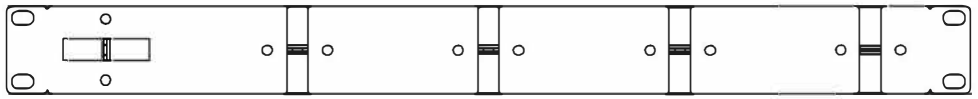

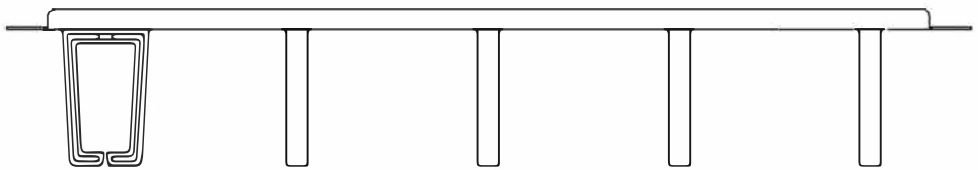

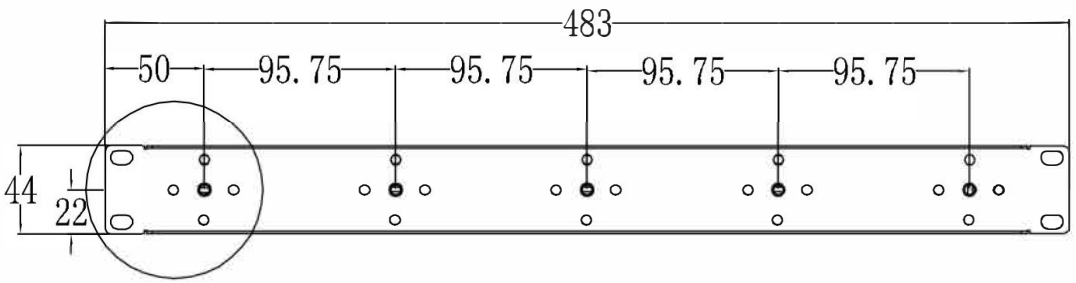

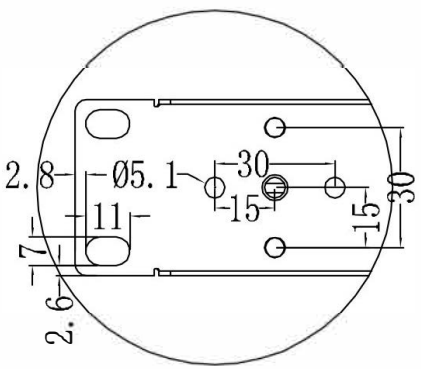

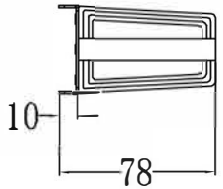

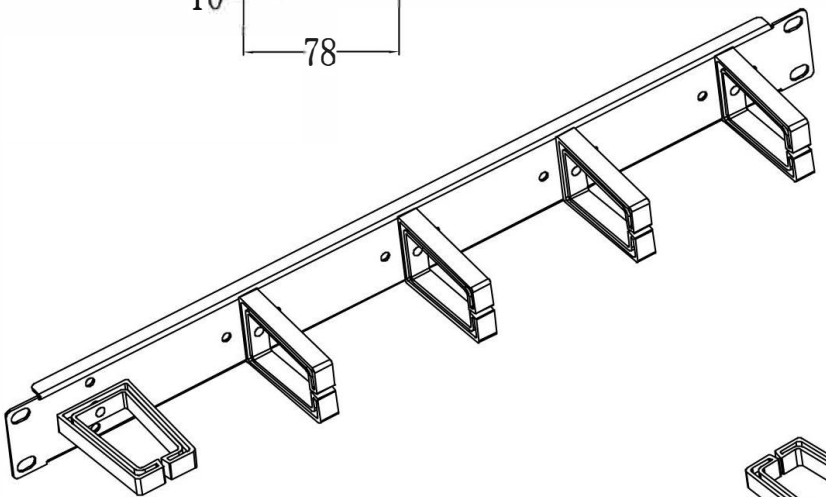

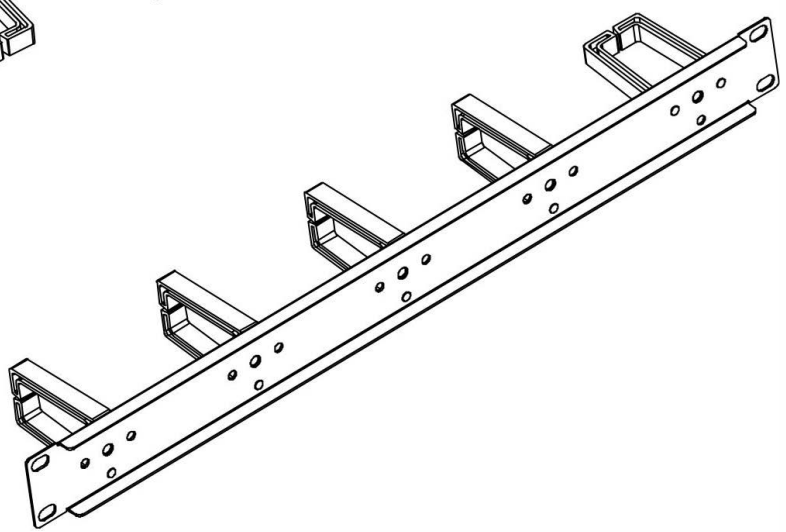

cablematic