Signal Surge Protector

RS485 SURGE PROTECTOR

Product Description

The control signal SPD apply to lightning surge protection of computer data interface or automatic control system, instruments and meters, data system electronic equipment, anti-thift system on and off data line and power.

◆ Apply to the lightning surge protection of 4 core signal line.

◆ Adopt international brand core components, with reliable quality, multi-level protection, low residual voltage, fast response time.

◆ Adopt principle of discharging, clamping and voltage stabilization to realize effective and reliable anti-shock high-voltage pulse and accurate clamping voltage.

◆ With low-volume design, excellent transmission performance.

◆ Large discharge current, low insertion loss, no interference and long working life.

◆ Small size, simple installation.

◆ Apply to the lightning protection of monitor PTZ control, decoding circuits, access control data line, video intercom, card, and fire alarm lines, data transmission lines, instrumentation lines, various audio signal transmission cable, infrared shooting.

Technology Parameters

Model	KLF-24V/4P
Working Voltage(Un)	24V
Rated Current	300mA
Nominal Discharge Current (8/20μs)(In)	5KA
Max. Discharge Current (8/20μs) (Imax.)	10KA
Voltage Protection Level(Up)	≤35V
Working Frequency	10MHz
Insertion Loss	≤0.2dB
Interface Model	4P terminals
Protected Core	1~4
Working Environment	Temperature:-40°C~+80°C;Relative humidity<90%
Material Of Outer Shell	Aluminum alloy
Dimension(L×W×H)	90×25×25mm
Weight	0.13kg

Product Installation

1. The lightning protection device is in series installed between signal channel and the equipment protected, the output termination is connected with the equipment protected.
2. All wires must be solid and connect by electric. Grounding line:BVR≥2.5mm^2.
3. Lightning proof grounding should be consistent with lightning protection regulatory requirements; grounding wire should be as thick and short as possible, resistance should be less than 4Ω.

Dimension Picture

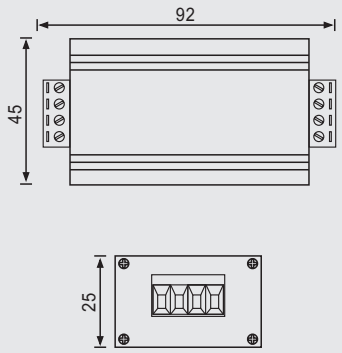

Unit: mm

Installation Diagram

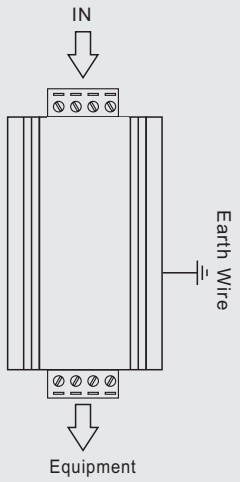

cablematic