BUY ON
www.cablematic.com

Features:

- Welded frame, reliable structure.
- Reversible 5mm toughened glass front door with lock.
- Removable side panels with side pins, side locks are optional for protection.
- Standing or wall mount installation.
- Easy and quick installation & maintenance.
- Cable entries on both of top cover and bottom panel.

Specifications:

- Material: SPCC cold rolled steel
- Thickness: Mounting rails: 1.5mm; others: 1.2mm
- Surface finishing: Degreasing, pickling, phosphoric, powder coated
- Static loading capacity: 60kgs

Standards:

- ANSI/EIA RS-310-D
- IEC60297-2
- DIN41494, PART1
- DIN41494, PART7
- Compatible with 19” International Standards, ETSI

Standard side panel

Frame

Installation hole of back panel

Optional accessories:

Cooling fan

1U cantilever shelf

1U cable manager

Blanking panel

BUY ON
www.cablematic.com

Structure of cabinet

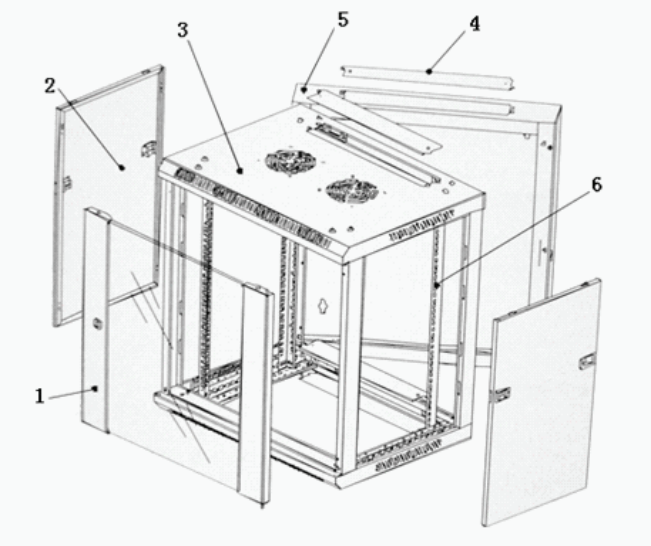

Front door options:

1-1: toughened glass door, with small round lock

1-2: toughened glass door with stripped hole border, with small round lock

1-3: toughened glass door with net hole border, with spring lock

1-4: metal plate door, with small round lock

1-5: perforated door, with spring lock

Main parts:

S/N	Specification	Qty	Unit	Material	Surface finishing	Remark
1	Toughened glass front door (1-1)	1	pc	SPCC	Powder coated	Small round lock
2	Removable side panels	2	pc	SPCC	Powder coated	---
3	Frame	1	pc	SPCC	Powder coated	---
4	Cable entry cover	2	pc	SPCC	Powder coated	---
5	Back panel	1	pc	SPCC	Powder coated	---
6	Mounting rails	4	pc	SPCC	Powder coated	---
7	M6 screws and nuts	20	set	---	---	10 sets for 12U lower

Specifications:

Model No.	Width (mm)	Depth (mm)	Capacity	Height (mm)	Assembled packing dimension (mm)	Assembled Volume (cbm)
ADW.6506	600	550	6U	370	620*570*390	0.14
ADW.6509			9U	500	620*570*520	0.18
ADW.6512			12U	635	620*570*655	0.23
ADW.6515			15U	770	620*570*790	0.28
ADW.6518			18U	900	620*570*920	0.33
ADW.6522			22U	1080	620*570*1100	0.39
ADW.6606		600	6U	370	620*620*390	0.15
ADW.6609			9U	500	620*620*520	0.20
ADW.6612			12U	635	620*620*655	0.25
ADW.6615			15U	770	620*620*790	0.30
ADW.6618			18U	900	620*620*920	0.35
ADW.6622			22U	1080	620*620*1100	0.42

Color options: Gray: Ral7035; Black: Ral9004; Black: Ral7021