ZONE	REV	DESCRIPTION	DATE	APPROVED
	08	CUSTOMER DRAWING RELEASE.	2024-12-12	JTS

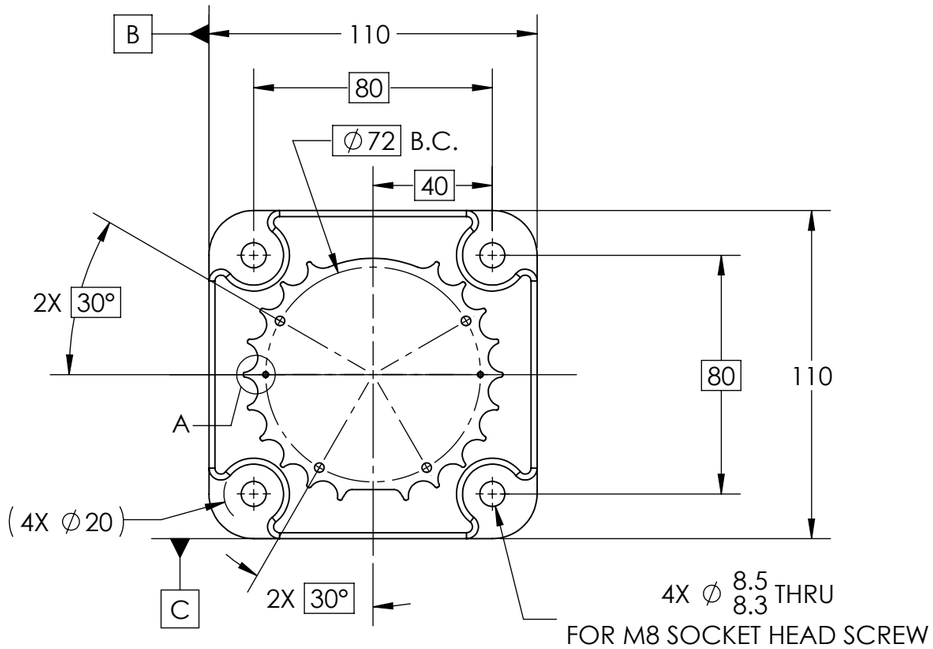

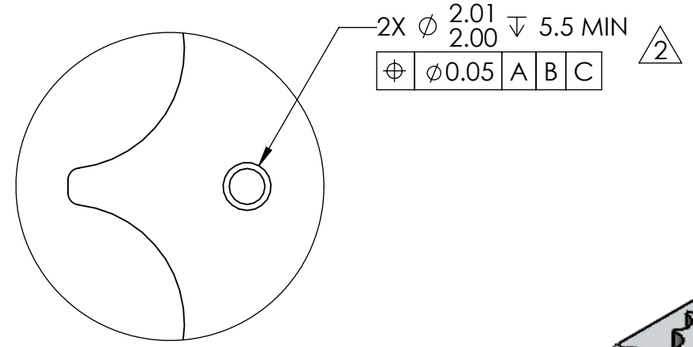

DETAIL A
SCALE 4 : 1

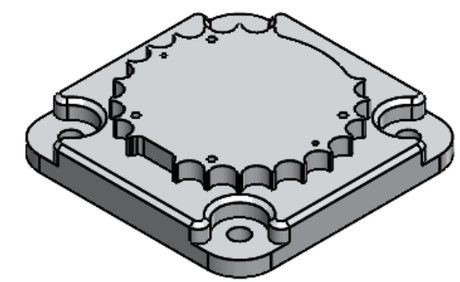

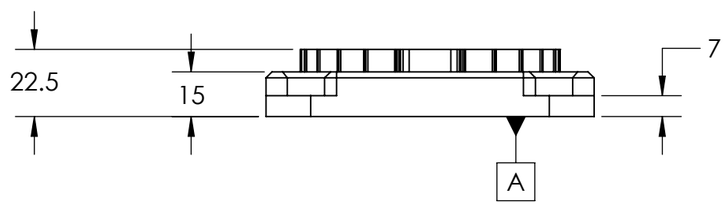

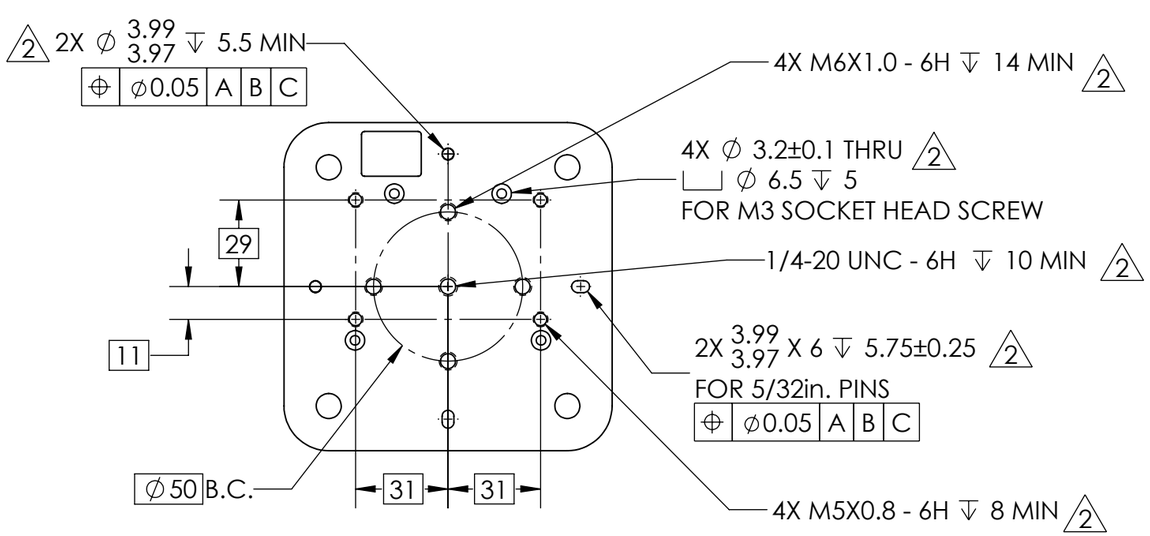

NOTES :

1. LIGHT SAND BLAST ON EXTERNAL SURFACE. CLEAR ANODIZED.

2. NOT ANODIZED WHERE INDICATED.

3. UNLESS OTHERWISE SPECIFIED:
   - LINEAR DIMENSION TOLERANCE ± 0.13.
   - POSITION TOLERANCE ALL HOLES ⌖ ∅0.26 A B C

PROPRIETARY AND CONFIDENTIAL
THE INFORMATION CONTAINED IN THIS DRAWING IS THE SOLE PROPERTY OF OUSTER INC. ANY REPRODUCTION IN PART OR AS A WHOLE WITHOUT THE WRITTEN PERMISSION OF OUSTER INC IS PROHIBITED.

DIMENSIONS ARE IN MM

MATERIAL: 6061-T6 ALUMINUM

FINISH: SEE NOTES

THIRD ANGLE PROJECTION

INTERPRET DRAWING PER ASME Y14.5-2018 AND Y14.100-2017

DO NOT SCALE DRAWING

OUSTER
Ouster, Inc.
350 Treat Ave
San Francisco, CA 94110

TITLE: BaseplateOSX_Universal

SIZE	DWG. NO.	REV
B	320-102985-CUST	08

SCALE: 1:2 | MASS: 526.27g | SHEET 1 OF 1