Flexible conduit bracket
INSTAL SP45 MB3

Flexible conduit brackets INSTAL SP45 MB3 are used for fastening flexible conduits to cable trays, lighting support rails and cable ladders.

Product name	**INSTAL SP45 MB3**		
SKU	**1431923**		
Material	**Steel**		
Corrosivity category	**C2**		
Color	**White**		
Sales unit	**PCE**		
Packing size	**1 PCE**		
Dimensions (mm) **Width | Height | Length**	**75**	**42**	**115**
Weight (kg/pce)	**0,13**		
GTIN	**6438377012571**		
Surface finish	**White paint**		



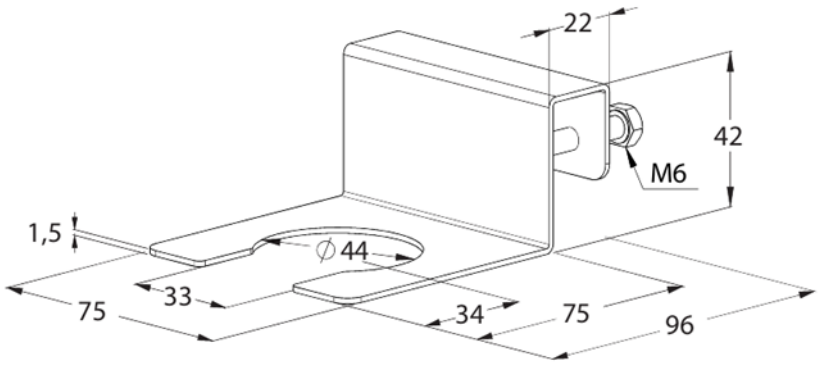

MEKA PRO OY
Konetie 25 / FI-90620 Oulu, Finland / +358 207 450 800 / meka@meka.eu

© Right to changes reserved. Propria Oy is the owner of all Meka Pro Oy trademarks.