Joint
MEK J-110 XPG

Joints MEK J are used to extend MEK-type lighting support rails.

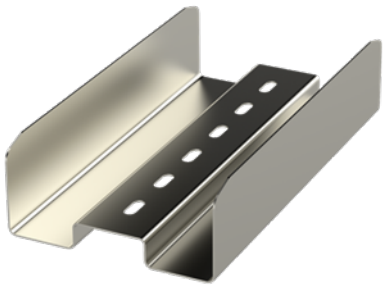

Product name	**MEK J-110 XPG**		
SKU	**1449289**		
Material	**Steel**		
Corrosivity category	**C1-C4**		
Color	**Grey**		
Sales unit	**PCE**		
Packing size	**10 PCE**		
Dimensions (mm) **Width | Height | Length**	**108**	**47**	**200**
Weight (kg/pce)	**0,34**		
GTIN	**6438377109011**		
Surface finish	**Manufactured of coated steel in accordance with standard EN 10346**		

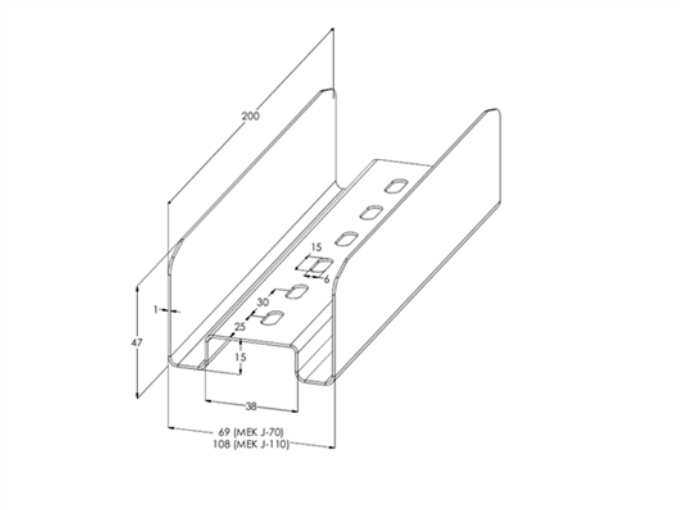

MEKA PRO OY
Konetie 25 / FI-90620 Oulu, Finland / +358 207 450 800 / meka@meka.eu

© Right to changes reserved. Propria Oy is the owner of all Meka Pro Oy trademarks.