Corner piece
KS100 VD-200 R=600 PG

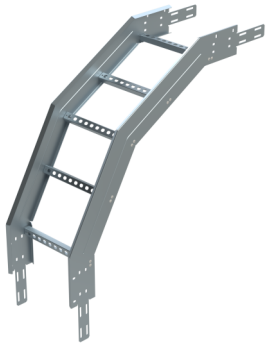

Product name	**KS100 VD-200 R=600 PG**		
SKU	**1478247**		
Material	**Steel**		
Corrosivity category	**C1-C2**		
Color	**Grey**		
Sales unit	**PCE**		
Packing size	**6 PCE**		
Dimensions (mm) **Width | Height | Length**	**728**	**200**	**728**
Weight (kg/pce)	**3,78**		
GTIN	**6438377163990**		
Surface finish	**Manufactured of hot-dip galvanized steel in accordance with standard EN 10346**		

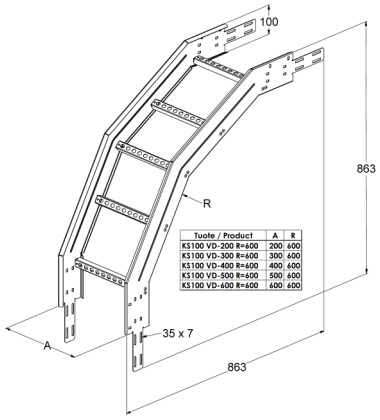

Dimension A (mm)	200
Radius R (mm)	600
CO2e/kg	2,61

MEKA PRO OY
Konetie 25 / FI-90620 Oulu, Finland / +358 207 450 800 / meka@meka.eu

© Right to changes reserved. Propria Oy is the owner of all Meka Pro Oy trademarks.