# Corner piece
# KS100 VD-600 R=600 XPG

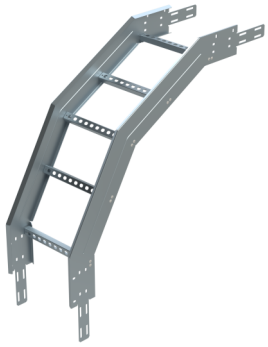

| | | | |
|---|---|---|---|
| **Product name** | **KS100 VD-600 R=600 XPG** | | |
| **SKU** | **1478261** | | |
| **Material** | **Steel** | | |
| **Corrosivity category** | **C1-C4** | | |
| **Color** | **Grey** | | |
| **Sales unit** | **PCE** | | |
| **Packing size** | **6 PCE** | | |
| **Dimensions (mm)**<br>**Width \| Height \| Length** | **728** | **600** | **728** |
| **Weight (kg/pce)** | **4,8** | | |
| **GTIN** | **6438377164089** | | |
| **Surface finish** | **Manufactured of coated steel in accordance with standard EN 10346** | | |

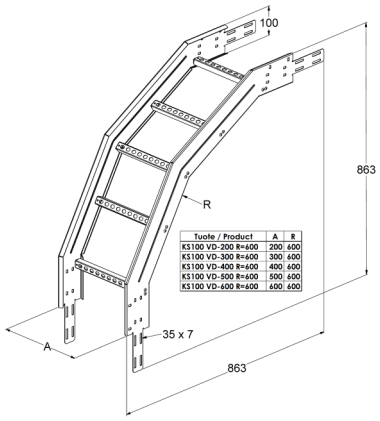


| | |
|---|---|
| Dimension A (mm) | 600 |
| Radius R (mm) | 600 |
| CO2e/kg | 2,72 |

**MEKA PRO OY**
**Konetie 25 / FI-90620 Oulu, Finland / +358 207 450 800 / meka@meka.eu**

© Right to changes reserved. Propria Oy is the owner of all Meka Pro Oy trademarks.