Cover
KS100 VDC-300 R=600 PG

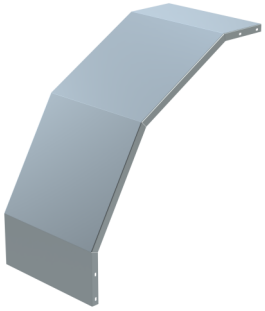

Product name	**KS100 VDC-300 R=600 PG**		
SKU	**1431981**		
Material	**Steel**		
Corrosivity category	**C1-C2**		
Color	**Grey**		
Sales unit	**PCE**		
Packing size	**10 PCE**		
Dimensions (mm) **Width | Height | Length**	**310**	**730**	**730**
Weight (kg/pce)	**3,2**		
GTIN	**6438377175498**		
Surface finish	**Manufactured of hot-dip galvanized steel in accordance with standard EN 10346**		

Dimension A (mm)	300
Radius R (mm)	600
CO2e/kg	2,61

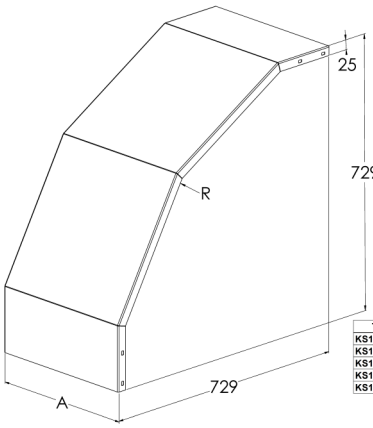

Tuote / Product	A	R
KS100 VDC-200 R=600	206	600
KS100 VDC-300 R=600	306	600
KS100 VDC-400 R=600	406	600
KS100 VDC-500 R=600	506	600
KS100 VDC-600 R=600	606	600

MEKA PRO OY
Konetie 25 / FI-90620 Oulu, Finland / +358 207 450 800 / meka@meka.eu

© Right to changes reserved. Propria Oy is the owner of all Meka Pro Oy trademarks.