Corner piece
KS100 VU-300 R=600 XPG



Product name	KS100 VU-300 R=600 XPG		
SKU	1478263		
Material	Steel		
Corrosivity category	C1-C4		
Color	Grey		
Sales unit	PCE		
Packing size	6 PCE		
Dimensions (mm) Width | Height | Length	670	300	670
Weight (kg/pce)	3,77		
GTIN	6438377164232		
Surface finish	Manufactured of coated steel in accordance with standard EN 10346		

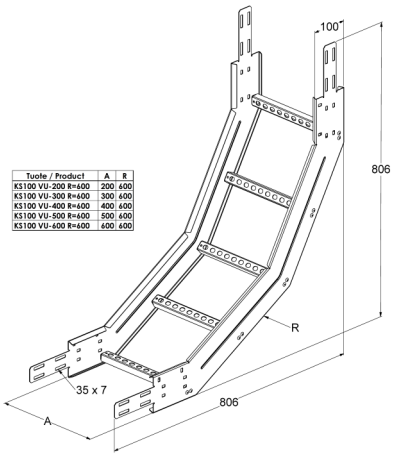

Dimension A (mm)	300
Radius R (mm)	600
CO2e/kg	2,72

MEKA PRO OY
Konetie 25 / FI-90620 Oulu, Finland / +358 207 450 800 / meka@meka.eu

© Right to changes reserved. Propria Oy is the owner of all Meka Pro Oy trademarks.