Corner piece
KS100 VU-400 R=600 XPG



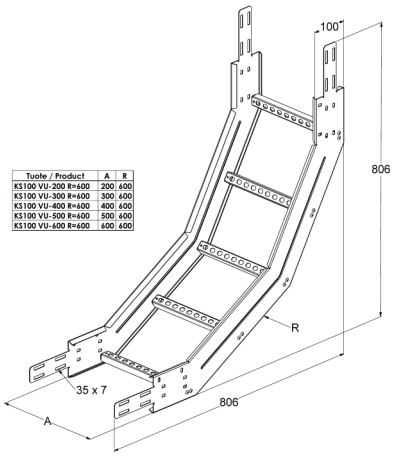

Product name	**KS100 VU-400 R=600 XPG**		
SKU	**1478264**		
Material	**Steel**		
Corrosivity category	**C1-C4**		
Color	**Grey**		
Sales unit	**PCE**		
Packing size	**6 PCE**		
Dimensions (mm) **Width | Height | Length**	**670**	**400**	**670**
Weight (kg/pce)	**4,02**		
GTIN	**6438377164249**		
Surface finish	**Manufactured of coated steel in accordance with standard EN 10346**		

Dimension A (mm)	400
Radius R (mm)	600
CO2e/kg	2,72

MEKA PRO OY
Konetie 25 / FI-90620 Oulu, Finland / +358 207 450 800 / meka@meka.eu

© Right to changes reserved. Propria Oy is the owner of all Meka Pro Oy trademarks.