# Corner piece
# KS100 VU-500 R=600 XPG



| Product name | KS100 VU-500 R=600 XPG | | |
|---|---|---|---|
| SKU | 1478265 | | |
| Material | Steel | | |
| Corrosivity category | C1-C4 | | |
| Color | Grey | | |
| Sales unit | PCE | | |
| Packing size | 6 PCE | | |
| Dimensions (mm)<br>Width \| Height \| Length | 670 | 500 | 670 |
| Weight (kg/pce) | 4,28 | | |
| GTIN | 6438377164256 | | |
| Surface finish | Manufactured of coated steel in accordance with standard EN 10346 | | |

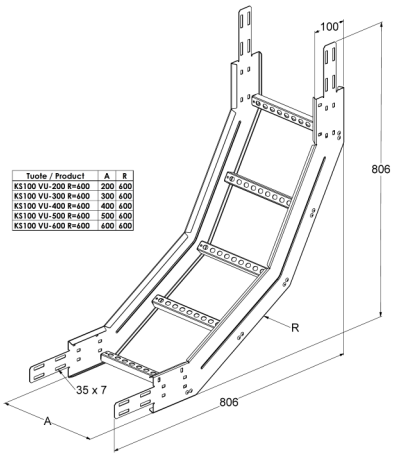


| | |
|---|---|
| Dimension A (mm) | 500 |
| Radius R (mm) | 600 |
| CO2e/kg | 2,72 |

**MEKA PRO OY**
**Konetie 25 / FI-90620 Oulu, Finland / +358 207 450 800 / meka@meka.eu**

© Right to changes reserved. Propria Oy is the owner of all Meka Pro Oy trademarks.