Cover
KS100 VUC-300 R=600 PG

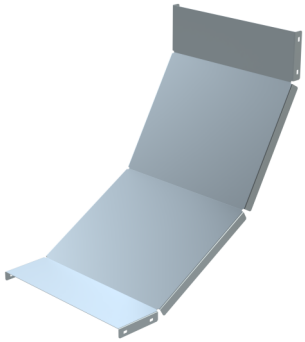

Product name	KS100 VUC-300 R=600 PG		
SKU	1432761		
Material	Steel		
Corrosivity category	C1-C2		
Color	Grey		
Sales unit	PCE		
Packing size	10 PCE		
Dimensions (mm) Width | Height | Length	310	590	590
Weight (kg/pce)	2,5		
GTIN	6438377175290		
Surface finish	Manufactured of hot-dip galvanized steel in accordance with standard EN 10346		

Dimension A (mm)	300
Radius R (mm)	600
CO2e/kg	2,61

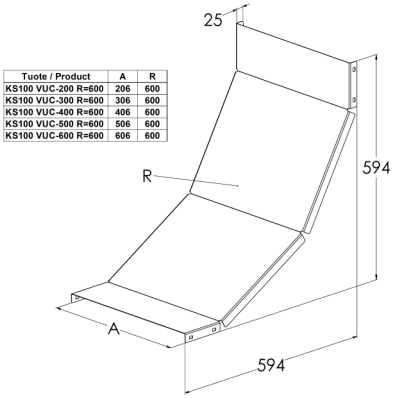

MEKA PRO OY
Konetie 25 / FI-90620 Oulu, Finland / +358 207 450 800 / meka@meka.eu

© Right to changes reserved. Propria Oy is the owner of all Meka Pro Oy trademarks.