Cover
KS100 VUC-300 R=600 XPG

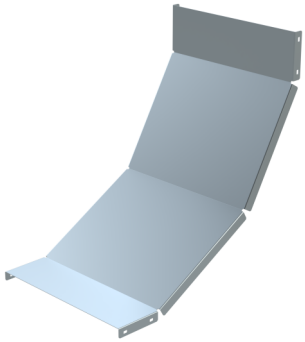

Product name	KS100 VUC-300 R=600 XPG		
SKU	1432770		
Material	Steel		
Corrosivity category	C1-C4		
Color	Grey		
Sales unit	PCE		
Packing size	10 PCE		
Dimensions (mm) Width | Height | Length	310	590	590
Weight (kg/pce)	2,5		
GTIN	6438377175399		
Surface finish	Manufactured of coated steel in accordance with standard EN 10346		

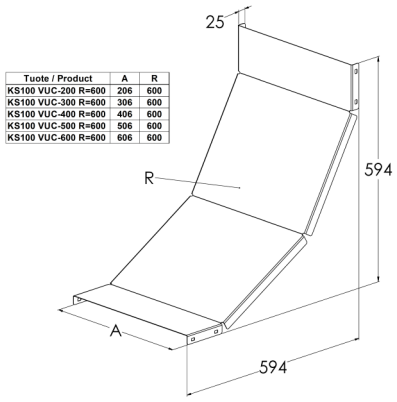

Dimension A (mm)	300
Radius R (mm)	600
CO2e/kg	2,72

MEKA PRO OY
Konetie 25 / FI-90620 Oulu, Finland / +358 207 450 800 / meka@meka.eu

© Right to changes reserved. Propria Oy is the owner of all Meka Pro Oy trademarks.