Autoranging True RMS Multimeter

TM-87 / TM-88

User’s manual

HB2TM8700000

Contents:

1. SAFETY PRECAUTIONS AND PROCEDURES 2
1.1. Preliminary 2
1.2. During use 3
1.3. After use 3
1.4. Measuring (overvoltage) categories definitions 3
2. GENERAL DESCRIPTION 4
2.1. Mean value and TRMS: definition 4
2.2. True root mean square value and crest factor: definition 4
3. PREPARATION FOR USE 5
3.1. Initial 5
3.2. Supply voltage 5
3.3. Calibration 5
3.4. Storage 5
4. OPERATING INSTRUCTIONS 6
4.1. Instrument - description 6
4.1.1. Front panel 6
4.2. Description of function keys 7
4.2.1. HOLD key 7
4.2.2. PK/REL key 7
4.2.3. MX/MN key 7
4.2.4. R/SEL key 7
4.2.5. Backlight key ( ) 8
4.2.6. Disable Auto Power OFF 8
4.3. Measurements 9
4.3.1. DC Voltage measurement 9
4.3.2. AC Voltage measurement 10
4.3.3. DC Current measurement 11
4.3.4. AC Current measurement 12
4.3.5. Resistance measurement and Continuity Test 13
4.3.6. Diode test 14
4.3.7. Capacitance measurement 15
4.3.8. Frequency measurement 16
4.3.9. Temperature test (Only for TM-88) 17
5. MAINTENANCE 18
5.1. General information 18
5.2. Battery replacement 18
5.3. Fuse replacement 19
5.4. Cleaning 19
5.5. End of life 19
6. TECHNICAL SPECIFICATIONS 20
6.1. Technical features 20
6.1.1. Electrical specifications 22
6.1.2. Safety 22
6.1.3. General data 23
6.2. Environment 23
6.2.1. Environmental conditions 23
6.2.2. EMC and LVD 23
6.3. Accessories 23
6.3.1. Standard accessories 23
7. SERVICE 24
7.1. Warranty conditions 24
7.2. After-sale service 24

1. SAFETY PRECAUTIONS AND PROCEDURES

This meter is in compliance with safety Standards EN 61010-1 related to electronic measuring instruments. For your own safety and to avoid damaging the instrument follow the procedures described in this instruction manual and read carefully all notes preceded by this symbol ⚠.When taking measurements:

- Avoid doing that in humid or wet places - make sure that humidity is within the limits indicated in paragraph 6.2.1.
- Avoid doing that in rooms where explosive gas, combustible gas, steam or excessive dust is present.
- Keep you insulated from the object under test.
- Do not touch exposed metal parts such as test lead ends, sockets, fixing objects, circuits etc.
- Avoid doing that if you notice anomalous conditions such as breakages, deformations, fractures, leakages of battery liquid, blind display etc.
- Be particularly careful when measuring voltages exceeding 20V to avoid risk of electrical shocks.

The following symbols are used:

⚠ CAUTION - refer to the instruction manual - an improper use may damage the instrument or its components

Danger high voltage: risk of electric shocks

Double insulated meter

~ AC voltage or current

⎓ DC voltage or current

1.1. PRELIMINARY

- This instrument has been designed for use in environments of pollution degree 2.
- It can be used for **VOLTAGE** and **CURRENT** measurements on installations of overvoltage CAT III 1000V and CAT IV 600V.
- This instrument is not suitable for measurements of non sine wave voltage and current.
- When using the instrument always respect the usual safety regulations aimed at protecting you against the dangerous electric currents and protecting the instrument against incorrect operations.
- Only the leads supplied with the instrument guarantee compliance with the safety standards in force. They must be in good conditions and, if necessary, replaced with identical ones.
- Do not test or connect to any circuit exceeding the specified overload protection.
- Do not effect measurements under environmental conditions exceeding the limits indicated in paragraphs 6.1.1 and 6.2.1.
- Make sure that batteries are properly installed.
- Before connecting the test probes to the installation make sure that the rotary selector is positioned on the right function.
- Make sure that LCD and rotary selector indicate the same function.

1.2. DURING USE

CAUTION

An improper use may damage the instrument and/or its components or injure the operator.

- When changing the range, first disconnect the test leads from the circuit under test in order to avoid any accident.
- When the instrument is connected to measuring circuits never touch any unused terminal.
- When measuring resistors do not add any voltage. Although there is a protection circuit, excessive voltage could cause malfunctioning.
- If during measurement the displayed values remain constant check whether the HOLD function is active.

1.3. AFTER USE

- After using the instrument turn it off.
- If you expect not to use the instrument for a long period remove the battery to avoid leakages of battery liquids which may damage its inner components.

1.4. MEASURING (OVERVOLTAGE) CATEGORIES DEFINITIONS

EN 61010-1: Safety requirements for electrical equipment for measurement, control and laboratory use, Part 1: General requirements, gives a definition of measuring category, usually called overvoltage category. Paragraph 6.7.4: Measuring circuits:

(OMISSIS)

circuits are divided into the following measurement categories:

- **Measurement category IV** is for measurements performed at the source of the low-voltage installation.

  Examples are electricity meters and measurements on primary overcurrent protection devices and ripple control units.
- **Measurement category III** is for measurements performed in the building installation.

  Examples are measurements on distribution boards, circuit breakers, wiring, including cables, bus-bars, junction boxes, switches, socket-outlets in the fixed installation, and equipment for industrial use and some other equipment, for example, stationary motors with permanent connection to fixed installation.
- **Measurement category II** is for measurements performed on circuits directly connected to the low voltage installation..

  Examples are measurements on household appliances, portable tools and similar equipment..
- **Measurement category I** is for measurements performed on circuits not directly connected to MAINS.

  Examples are measurements on circuits not derived from MAINS, and specially protected (internal) MAINS-derived circuits. In the latter case, transient stresses are variable; for that reason, the norm requires that the transient withstand capability of the equipment is made known to the user.

2. GENERAL DESCRIPTION

This meter performs the below listed measurements:

- DC and AC TRMS Voltage
- DC and AC TRMS Current
- Resistance and Continuity test
- Frequency
- Capacitance
- Diode test

All selectable by means of a 10 position rotary selector (including OFF position). Functions keys are also available (see chapter 4.2). An analogical bargraph is also available. The selected quantity is displayed with indication of measuring unit and active functions.

The instrument disposes of an Auto Power Off function consisting in an automatic switching off 30 minutes after last selector rotation or function selection.

2.1. MEAN VALUE AND TRMS: DEFINITION

Safety testers for AC quantities are divided in two big families:

- MEAN VALUE instruments, measuring only the value of the wave at the fundamental frequency (50 or 60 Hz)
- TRUE ROOT MEAN SQUARE (or “TRMS”) instruments, measuring the true root mean square value of the quantity under test.

In presence of a perfectly sinusoidal wave, both families provide identical results. While in presence of distorted waves, readings are different. Mean value instruments provide only the value of the fundamental wave while TRMS instruments provide the value of the entire wave, including harmonics (within the passband of the instrument). Accordingly, if the same quantity is measured with both kinds of instruments, the measured values are identical only if the wave is purely sinusoidal. Should it be distorted, TRMS instruments provide higher values than MEAN VALUE instruments.

2.2. TRUE ROOT MEAN SQUARE VALUE AND CREST FACTOR: DEFINITION

The effective current value is defined as follows: “In an interval of time equivalent to a period, an alternate current with effective value having an intensity of 1A, by passing on a resistor, disperses the same energy which would be dispersed in the same period of time by a direct current having an intensity of 1A”. From this definition comes the numerical expression: G= $\sqrt{\frac{1}{T}\int_{t_0}^{t_0+T} g^2(t)dt}$ The effective value is indicated as RMS (*root mean square*).

The Crest Factor is defined as the ratio between the Peak Value of a signal and its effective value: CF (G)= $\frac{G_p}{G_{RMS}}$. This value varies according to the waveform of the signal, for a purely sinusoidal wave it’s worth $\sqrt{2}$ =1.41. In presence of distortions the Crest Factor assumes higher values as long as the wave distortion is higher.

3. PREPARATION FOR USE

3.1. INITIAL

This instrument was checked both mechanically and electrically prior to shipment. All possible cares and precautions were taken to let you receive the instrument in perfect conditions. Notwithstanding we suggest you to check it rapidly (eventual damages may have occurred during transport – if so please contact the local distributor from whom you bought the item).
Make sure that all standard accessories mentioned in paragraph 6.3.1 are included. Should you have to return back the instrument for any reason please follow the instructions mentioned in paragraph 7.

3.2. SUPPLY VOLTAGE

The instrument is supplied by 1x9V battery type NEDA1604 JIS006P IEC6F22. When battery is low, a low battery indication "+ -" is displayed. To replace/insert battery please refer to paragraph 5.2.

3.3. CALIBRATION

The instrument complies with the technical specifications contained in this manual and such compliance is guaranteed for 1 year. Annual recalibration is recommended.

3.4. STORAGE

After a period of storage under extreme environmental conditions exceeding the limits mentioned in paragraph 6.2.1 let the instrument resume normal measuring conditions before using it.

4. OPERATING INSTRUCTIONS

4.1. INSTRUMENT - DESCRIPTION

4.1.1. Front panel

LEGEND:

1. LCD
2. HOLD Key
3. PK/ REL Key
4. MX/ MN Key
5. R/SEL Key
6. Backlight Key
7. OFF position
8. DCV position
9. ACV position
10. Posizione Ω/ •))
11. ⊣▶⊢ position
12. ⊣⊢ position
13. Hz position
14. μADC position
    °C and °F position(TM-88)
15. μAAC position
    DCμA and ACμA position(TM-88)
16. DCA and ACA position
17. COM,A,and VΩ⊣▶⊢•)) Hz ⊣⊢ μA °C °F

Fig. 1: Instrument description

4.2. DESCRIPTION OF FUNCTION KEYS

When pressing a key, the corresponding symbol is displayed with a beep. To resume default state turn the selector on another function.

4.2.1. HOLD key

By pressing **HOLD** key the measured value is frozen on the display where the symbol "HOLD" appears. Press again **HOLD** to disable this function and resume normal operation.

4.2.2. PK/REL key

This key have the double function of measuring max/min peak values (active for **~V** and **~μA** positions of rotary selector) and performing relative measurements (**REL**) for **⎓V**, **≂ A, Hz**, **Ω/ •)))** ,**▶|**, ⊣⊢ and **⎓μA** positions of rotary selector.

This key have the double function of measuring max/min peak values (active for **~V** and **~μA** positions of rotary selector) and performing relative measurements (**REL**) for **⎓V**, **Hz**, **Ω/ •)))** ,**▶|**, ⊣⊢ and **℃/℉** positions of rotary selector.(TM-88)

Press cyclically **PK/REL** to measure and save peak values. “P_{MAX}” and “P_{MIN}” symbols on the display correspond to Maximum Peak and Minimum Peak values respectively which are continuously updated by the meter. By keeping pressed **PK/REL** key for at least 3 seconds, “CAL” symbol appears on the display and the meter performs an auto calibration permitting a higher accuracy on peak measurements.

To exit this function keep pressed **PK/REL** for at least one second or rotate the selector on another position.

By pressing **PK/REL** key, the relative measurement is activated: the meter saves the (offset) value on the display and the “REL” symbol is shown. The following measurement will be referred to this offset value. By pressing again **PK/REL** key the offset value is shown and the “REL” symbol is blinking.

To exit this function keep pressed **PK/REL** for at least one second or rotate the selector on another position.

4.2.3. MX/MN key

By pressing **MX/MN** key, maximum and minimum values are measured. Both values are stored and automatically updated as soon as an higher value (MAX) or lower value (MIN) are measured by meter. The symbol corresponding to the desired function is displayed: “MAX” for maximum value, “MIN” for minimum value. **MX/MN** key is disabled when HOLD function is active.

To exit this function keep **MX/MN** key pressed for at least 1 second or rotate the selector to another position.

4.2.4. R/SEL key

By pressing **R/SEL** key the manual selection of measured range (exception **▶|**, **~A** and **⎓A** positions) and the selection of a double function which are included on selector (by choosing between **Ω •)))** measure and AC or DC Current) are possible. The “MANU” symbol is shown at display by pressing **R/SEL** key and the cyclically pressure of the key change the measuring range and fix the decimal point on the display. Press **R/SEL** key at least 1second or rotate the selector to exit from this function and restore the “AUTO” symbol at display.

4.2.5. Backlight key ( )

By pressing key it's possible to activate the backlight function on the display. The function automatically disabled itself after some seconds and is available on each position of the rotary selector.

4.2.6. Disable Auto Power OFF

When the meter is to be used for long periods of time, the operator might want to disable the AutoPowerOFF function. Once the AutoPowerOFF function is disabled the meter stays on continuously. To disable the AutoPowerOFF function:

- Switch OFF the meter.
- Turn ON the meter keeping pressed **PK/REL**, **MX/MIN** and **R/SEL** keys.

The AutoPowerOFF function is automatically activated when turning ON again the meter.

4.3. MEASUREMENTS

4.3.1. DC Voltage measurement

CAUTION

The maximum input for DC voltage is 1000V. Do not attempt to measure higher voltages to avoid electrical shocks or damages to the instrument.

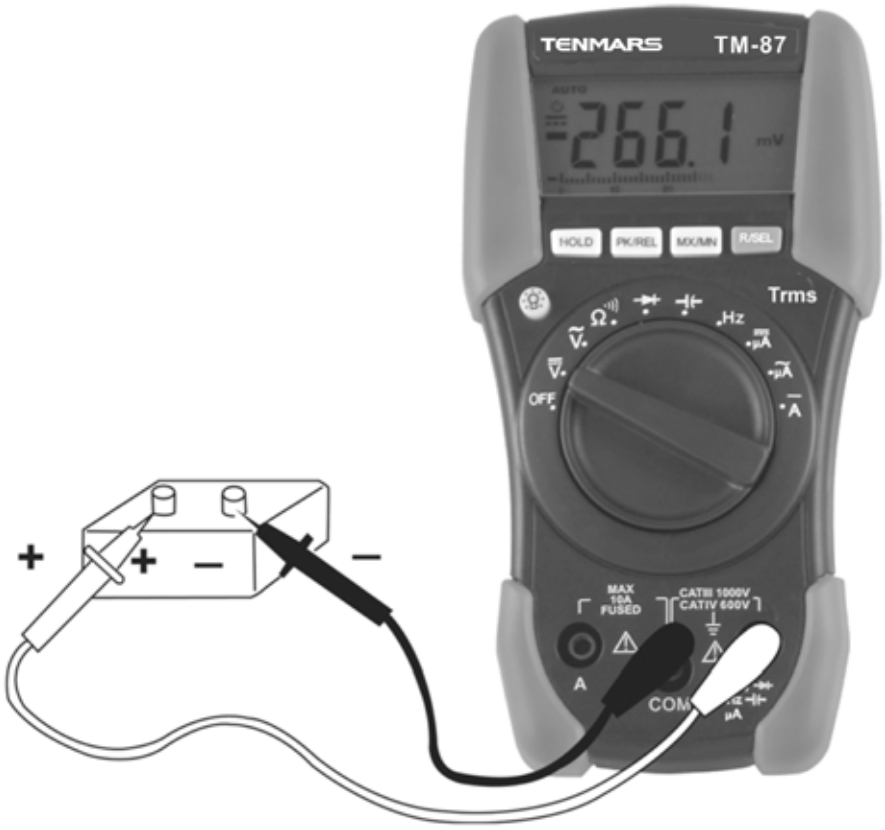

Fig. 2: Using the meter for DC Voltage measurement

1. Selecting the position **V⎓**.
2. Pressing the **R/SEL** key to select the correct range or using the Autorange feature (see paragraph 4.2.4). If the voltage value under test is unknown, select the highest range.
3. Insert the test leads into the jacks, the red plug into **HzVΩμA** jack and black plug into **COM** jack (see Fig. 2).
4. Connect the red and black test leads to the positive and negative poles of the circuit under test respectively. The voltage value is displayed.
5. If the message "**O.L**" is displayed select a higher range.
6. The symbol "**-**" on the instrument display indicates that voltage has opposite direction with regard to the connection.
7. For HOLD function, Minimum and Maximum value measurement and Relative measure please refer to paragraph 4.2.

4.3.2. AC Voltage measurement

CAUTION

The maximum input for AC voltage is 750Vrms. Do not attempt to measure higher voltages to avoid electrical shocks or damages to the instrument.

Fig. 3: Using the instrument for AC Voltage measurement

1. Selecting the position **V∼**.
2. Pressing the **R/SEL** key to select the correct range or using the Autorange feature (see paragraph 4.2.4). If the voltage value under test is unknown, select the highest range.
3. Insert the test leads into the jacks, the red plug into **HzVΩμA** jack and black plug into **COM** jack (see Fig. 3).
4. Connect the test leads to the circuit under test. The voltage value is displayed.
5. If the message "**O.L**" is displayed select a higher range.
6. For HOLD function, Minimum and Maximum value measurement and Peak measurement please refer to paragraph 4.2.

4.3.3. DC Current measurement

CAUTION

The maximum input for DC current is 10A. Do not attempt to measure higher currents to avoid electrical shocks or damages to the instrument.

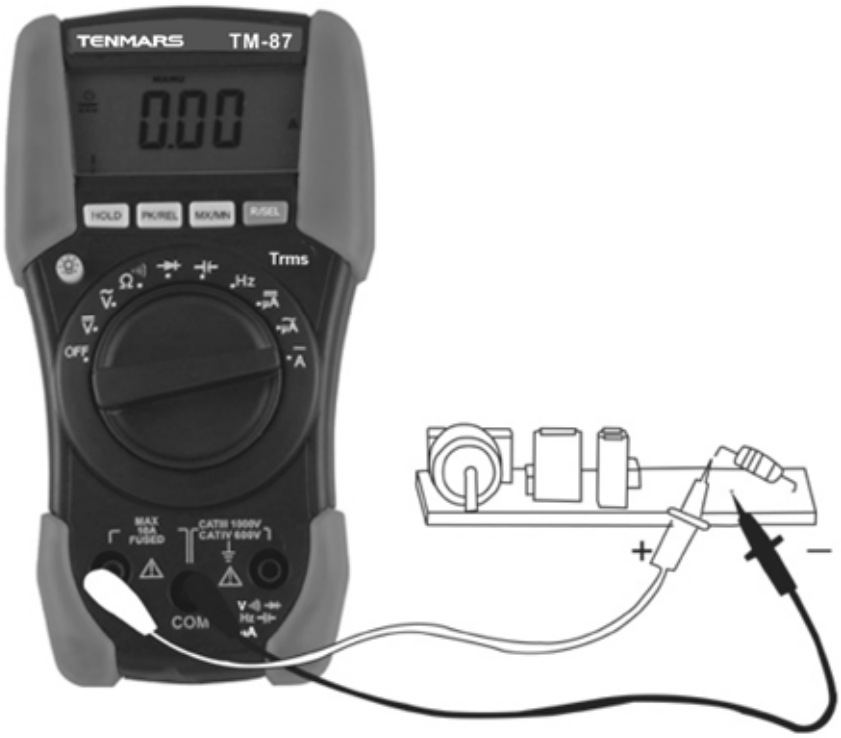

Fig. 4: Using the instrument for DC Current measurement

1. Power off the circuit under test.
2. Selecting the position **A** ⎓. The message " ⎓ " is shown at display.
3. Insert the test leads into the jacks, the red plug into **A** jack and black plug into **COM** jack (see Fig. 4).
4. Connect the red and the black plugs in series with the circuit whose current is to be measured respecting the polarities.
5. Energize the circuit under test. The current value will be displayed.
6. The message "**O.L.**" means that the detected current exceeds the limits.
7. If the measured value is lower than **4mA**, to get a better resolution:
   - Switch off the circuit under test.
   - Turn the selector on ⎓**µA**.
   - Remove the red test lead from **A** jack, and insert it into ⊣⊢**HzVΩµA** jack and power the circuit under test. Press **R/SEL** key if necessary to select an higher range.
8. The symbol "**-**" on the instrument display indicates that current has opposite direction with regard to the connection.
9. For HOLD function, Minimum and Maximum value measurement and Relative measure please refer to paragraph 4.2.

4.3.4. AC Current measurement

CAUTION

The maximum input for DC current is 10A. Do not attempt to measure higher currents to avoid electrical shocks or damages to the instrument.

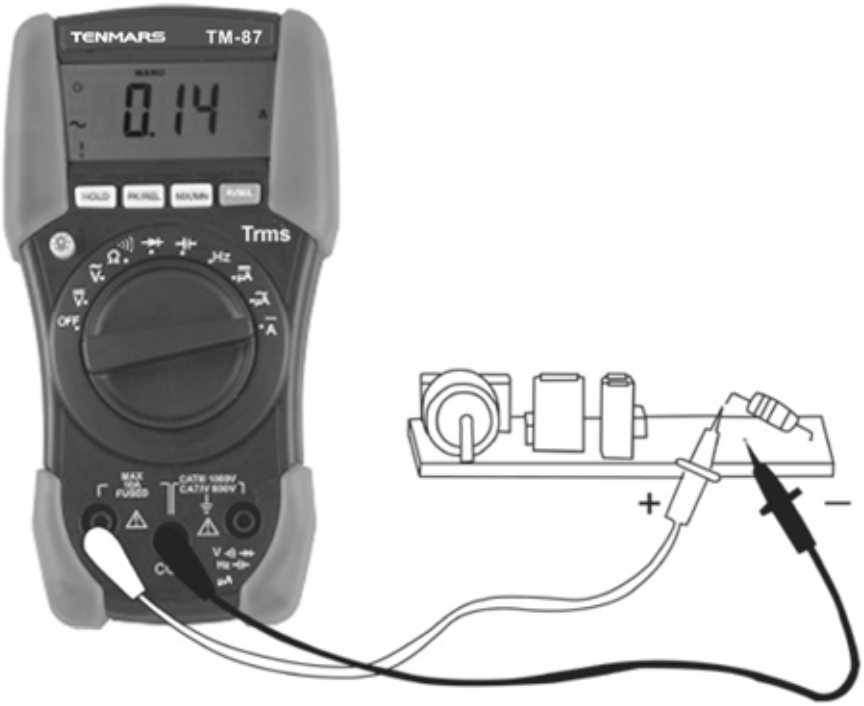

Fig. 5: Using the instrument for AC Current measurement

1. Power off the circuit under test.
2. Selecting the position ⎓**A**. By pressing **R/SEL** key to select AC measurement. The " ∼ " symbol is shown at display.
3. Insert the test leads into the jacks, the red plug into **A** jack and black plug into **COM** jack (see Fig. 5).
4. Connect the red and the black plugs in series with the circuit whose current is to be measured.
5. Energize the circuit under test. The current value will be displayed.
6. The message "**O.L.**" means that the detected current exceeds the limits.
7. If the measured value is lower than **4mA**, to get a better resolution:
   - Switch off the circuit under test.
   - Turn the selector on ∼**µA**.
   - Remove the red test lead from **A** jack, and insert it into ⊣⊢**HzVΩµA** jack and power the circuit under test. Press **R/SEL** key if necessary to select an higher range.
8. For HOLD function, Minimum and Maximum value measurement, Peak measurement (for ∼**µA** position) and for Relative measurement (for ⎓**A** position) please refer to paragraph 4.2.

4.3.5. Resistance measurement and Continuity Test

CAUTION

Before taking resistance measurements on the circuit remove power from the circuit being tested and discharge all capacitors.

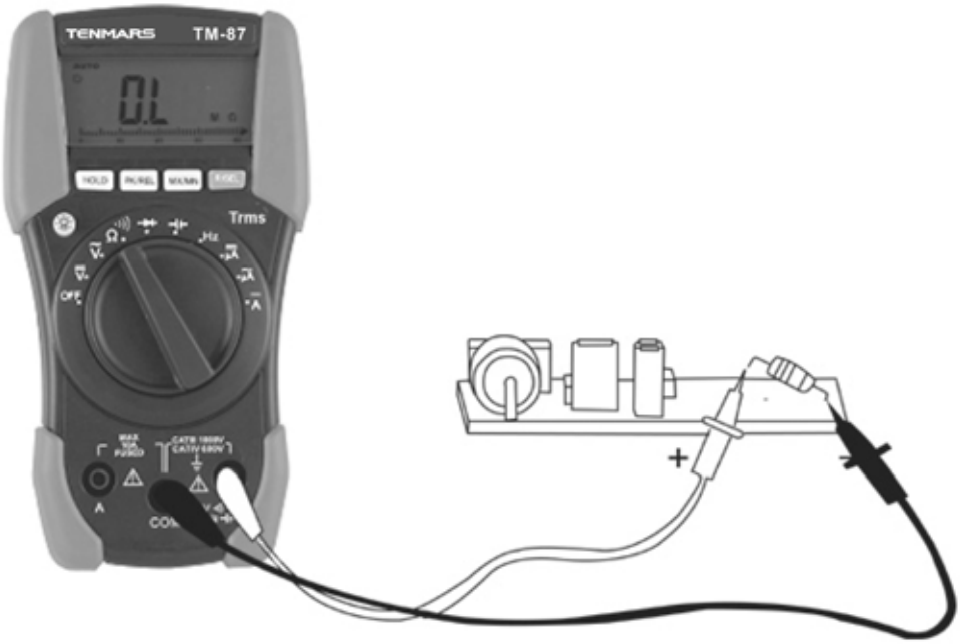

Fig. 6: Using the instrument for Resistance measurement and Continuity test

1. Selecting the position Ω ·))) .
2. Insert the test leads into the jack, the red plug into ⊣⊢**HzVΩμA** jack and black plug into **COM** jack (see Fig. 6).
3. Connect the test leads to the circuit under test. The resistance value is displayed.
4. Pressing the **R/SEL** key to select the correct range or using the Autorange feature (see paragraph 4.2.4). If the resistance value under test is unknown, select the highest range.
5. If the message "**O.L**" is displayed a higher range must be selected.
6. The continuity test is always active and the test is performed using the test leads in the same way of resistance measurement. The buzzer is on for resistance values <35Ω.
7. For HOLD function, Minimum and Maximum value measurement and Relative measure please refer to paragraph 4.2.

4.3.6. Diode test

CAUTION

Before taking diode test on remove power from the circuit being tested and discharge all capacitors.

Fig. 7: Using the instrument for Diode test

1. Selecting the position ⊣▶⊢ .
2. Insert the test leads into the jacks, the red plug into ⊣⊢**HzVΩμA** jack, and black plug into **COM** jack.
3. Connect the test leads to the diode under test observing the proper polarities (see Fig. 7). The threshold voltage value of direct polarization is shown at display. The meter displays the diode voltage to approximately 0.4 ~ 0.9V for good junction.
4. If the threshold voltage value is 0V the diode P-N junction is shorted circuit.
5. If the message " **O.L.**" is displayed the diode terminals are reversed or the diode P-N junction is damaged.
6. For HOLD function, Minimum and Maximum value measurement and Relative measure please refer to paragraph 4.2.

4.3.7. Capacitance measurement

CAUTION

Before taking capacitance measurements in circuit remove power from the circuit being tested and discharge all capacitors. Use the short test lead pair for measurement to reduce the stray capacitance. Before connecting the test capacitor observe the display, which may have a reading other than zero every time the range is changed. Subtract this offset reading from the displayed reading of the test result of a capacitor to obtain the true value.
Connect the test capacitor to the inputs respecting the polarity connections when required. Due to internal delay time, bargraph it's no operative in capacitance measurement.

Fig. 8: Using the instrument for Capacitance measurement

1. Selecting the position ⊣⊢.
2. Insert the test leads into the jacks, the red plug into ⊣⊢**HzVΩμA** jack and black plug into **COM** jack (see Fig. 8).
3. Connect the red and black test clamps to the capacitor terminals respecting if necessary the proper polarities. The capacitance value is shown on display.
4. Pressing the **R/SEL** key to select the correct range or using the Autorange feature (see paragraph 4.2.4). If the capacitance value under test is unknown, select the highest range.
5. If the message "**O.L**" is displayed the maximum readable value is reached.
6. For HOLD function, Minimum and Maximum value measurement and Relative measure please refer to paragraph 4.2.

4.3.8. Frequency measurement

CAUTION

The maximum input for AC voltage is 750Vrms. Do not attempt to measure higher voltages to avoid electrical shocks or damages to the instrument.

Fig. 9: Using the instrument for Frequency measurement

1. Selecting the position **Hz**.
2. Insert the test leads into the jacks, the red plug into ⊣⊢**HzVΩμA** jack and black plug into **COM** jack (see Fig. 9).
3. Connect the test leads to the circuit under test. The frequency value will be displayed.
4. Pressing the **R/SEL** key to select the correct range or using the Autorange feature (see paragraph 4.2.4). If the freqency value under test is unknown, select the highest range
5. If the message "**O.L**" is displayed the maximum readable value is reached.
6. For HOLD function, Minimum and Maximum value measurement and Relative measure please refer to paragraph 4.2.

4.3.9. Temperature test (Only for TM-88)

CAUTION

The maximum input of AC voltage is 24Vrms DC voltage is 60V. Do not attempt to measure higher voltages to avoid electrical shocks or damages to the instrument.

Fig. 10 : Using the instrument for Temperature test

1. Selecting the position °C/°F.
2. Pressing the **R/SEL** key to select the°C and °F readings.
3. Insert the banana plug adapter T10 with correct ＋plug into VΩ**HzµA**°C°F jack, and －plug into **COM** jack. with banana pins to K-type socket to adapt other standard K-type mini plug temperature probes.
4. Connect the other ends of temperature test leads for temperature measurement.

5. MAINTENANCE

5.1. GENERAL INFORMATION

This is a precision instrument. To guarantee its performances be sure to use it according to these instructions and keep it stored on suitable environmental conditions Do not expose it to high temperatures or humidity or direct sunlight. Be sure to turn it off after use. If you expect not to use the instrument for a long period remove batteries to avoid leakages of battery liquid which could damage its inner components.

5.2. BATTERY REPLACEMENT

When the low battery indication "[+-]" is shown the battery it's to be replaced.

CAUTION

Only skilled technicians can open the instrument and replace batteries. Before removing batteries disconnect the test leads from the input terminals to avoid electrical shocks.

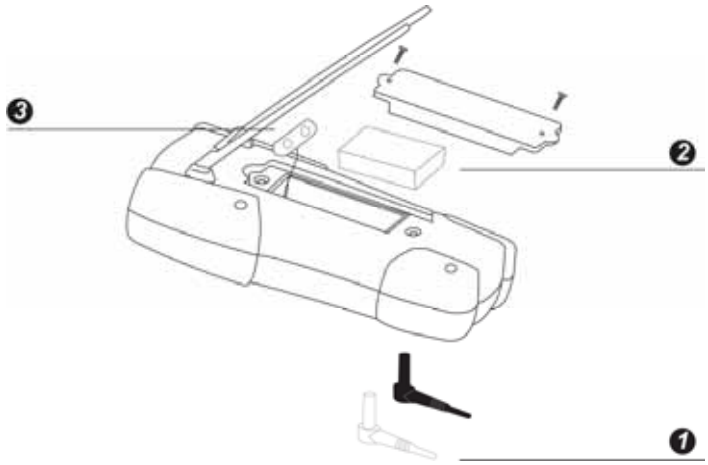

LEGEND:

1. Disconnect the test leads from the input terminals.
2. Remove the fixing screws from the back case and detach it.
3. Remove the battery replacing it with new one (9V NEDA1604, JIS006P, IEC6F22) respecting the polarity signs and replace the back case and screws. Use the appropriate battery disposal methods for your area.

Fig. 10: Battery replacement

5.3. FUSE REPLACEMENT

CAUTION

Before replacing fuses, disconnect test leads from any energized circuit to avoid electrical shock.

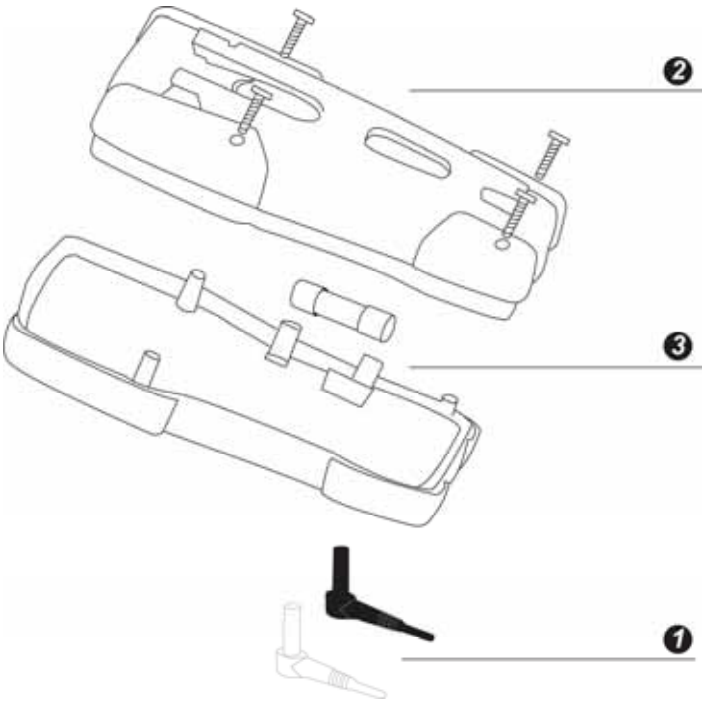

LEGEND:

1. Turn OFF the meter and disconnect the test leads from the input terminals.
2. Unscrew the four fixing screws of the back holster and remove it.
3. Remove the defective fuse and install a new fuse of the same size and rating (fast 10A/1000V Bussmann type). Make sure the new fuse is centered in the fuse holder. Re-screw the back holster.

Fig. 11: Fuse replacement

5.4. CLEANING

To clean the instrument use a soft dry cloth. Never use a wet cloth, solvents or water.

5.5. END OF LIFE

Caution: this symbol indicates that equipment and its accessories shall be subject to a separate collection and correct disposal.

6. TECHNICAL SPECIFICATIONS

6.1. TECHNICAL FEATURES

The accuracy is indicated as [% of reading + number of digits] at 23°C±5°C, < 80%HR

DC Voltage

Range	Resolution	Accuracy	Input impedance	Overload protection
400.0mV	0.1mV	±(0.5%rdg + 3dgt)	10MΩ // <100pF	1000VDC 750VACrms
4.000V	0.001V	±(0.5%rdg + 2dgt)		
40.00V	0.01V			
400.0V	0.1V			
1000V	1V	±(1.0%rdg + 2dgt)		

AC TRMS Voltage

Range	Resolution	Accuracy (50÷500Hz)	Input impedance	Overload protection
400.0mV	0.1mV	Not declared	10MΩ // <100pF	1000VDC 750VACrms
4.000V	0.001V	±(1.3%rdg + 5dgt) (50÷300Hz)		
40.00V	0.01V	±(1.5%rdg + 3dgt) (50÷500Hz)		
400.0V	0.1V			
750V	1V			

DC Current

Range	Resolution	Accuracy (*)	Output voltage	Overload protection
400.0μA	0.1μA	±(1.0%rdg + 2dgt)	<5mV/μA	750Vrms
4000μA	1μA			
10.00A	0.01A		2V max	Fuse 10A/1000V

AC TRMS Current

Range	Resolution	Accuracy (50÷500Hz)	Output voltage	Overload protection
400.0μA	0.1μA	±(1.2%rdg + 5dgt)	<5mV/μA	750Vrms
4000μA	1μA			
10.00A	0.01A	±(1.5%rdg+5dgt) (50 ÷ 399Hz) ±(2.0%rdg+5dgt) (400 ÷ 500Hz)	2Vmax	Fuse 10A/1000V

Resistance

Range	Resolution	Accuracy	Max Open Circuit Voltage	Overload protection
400.0Ω	0.1Ω	±(1.0%rdg + 5dgt)	about 1.3V	600Vrms
4.000kΩ	0.001kΩ	±(0.8%rdg + 2dgt)	about 0.45V	
40.00kΩ	0.01kΩ			
400.0kΩ	0.1kΩ			
4.000MΩ	0.001MΩ	±(1.0%rdg + 2dgt)		
40.00MΩ	0.01MΩ	±(1.5%rdg + 5dgt)		

Diode Test

Feature	Resolution	Accuracy (0.4 ÷ 0.8V)	Test current	Open voltage	Overload protection
⊣▶⊢	10mV	±(1.5%rdg + 5dgt)	1.5mA	<3V	600Vrms

Continuity Test

Feature	Buzzer	Open voltage	Overload protection
•)))	<35Ω	about 1.3V	600Vrms

Frequency

Range	Resolution	Accuracy	Sensitivity	Overload protection
4.000kHz	0.001kHz	±(0.1%rdg + 2dgt)	>1.5VACrms <5VACrms	600Vrms
40.00kHz	0.01kHz			
400.0kHz	0.1kHz			
4.000MHz	0.001MHz		>2VACrms <5VACrms	
40.00MHz	0.01MHz			
400.0MHz	0.1MHz	Not declared		

Minimum pulse duration: 25ns
30% ≤ Duty Cycle ≤70%

Capacitance

Range	Resolution	Accuracy	Overload protection
4.000nF	0.001nF	Not declared	600Vrms
40.00nF	0.01nF		
400.0nF	0.1nF	±(2.0%rdg + 8dgt)	
4.000μF	0.001μF		
40.00μF	0.01μF		
400.0μF	0.1μF		
4.000mF	0.001mF	±(5.0%rdg+20dgt)	
40.00mF	0.01mF		

Temperature
Use T10 adapter and K-type probe (only TM-88)

Range	Resolution	Accuracy	Overload protection
℃	1℃	-40℃~0℃±(1.8%rdg + 3℃) 1℃~400℃±(1.0%rdg +3℃) 401℃~800℃±(2.0%rdg +3℃)	Max. input voltage for thermocouple：DC60V/AC24V.
℉	1℉	-40℉~32℉±(1.8%rdg + 5℉) 33℉~778℉±(1.0%rdg +5℉) 779℉~1382℉±(2.0%rdg +5℉)	

The tolerance of temp probe excluded.

6.1.1. Electrical specifications

Conversion:	TRMS
Measuring rate:	1.5 times per second
Temperature coefficient:	0.15×(accuracy)/°C (<18°C and >28°C)
NMRR Normal Mode Rejection Ratio:	> 50dB for DC parameters and 50/60Hz
CMRR Common Mode Rejection Ratio:	>100dB from DC up to 60Hz on DCV > 60dB from DC up to 60Hz on ACV

6.1.2. Safety

The instrument complies to:	EN 61010-1
Insulation:	Class 2, Double insulation
Pollution degree:	2
Overvoltage category:	CAT IV 600V, CAT III 1000V (**V/Ω/μA)**
Max height:	2000m

6.1.3. General data

Mechanical characteristics

Dimensions:	163(L) x 88(W) x 48(H)mm
Weight (including batteries):	approx. 400g

Power supply

Battery type:	1 x 9V battery NEDA1604, JIS006P, IEC6F22
Indication of low batteries:	the symbol "[+ -]" is displayed when batteries are low.
Battery life:	approx. 300 hours
Auto power OFF:	after 30 minutes

Display

Specifications:	4 LCD with max. reading 3999 counts + symbol decimal point sign and bargraph
Out of range indications:	"**OL**" or "**-OL**"

6.2. ENVIRONMENT

6.2.1. Environmental conditions

Reference temperature:	23° ± 5°C
Working temperature:	0 ÷ 30°C
Relative humidity:	<80%HR
Storage temperature:	-20 ÷ 60°C
Storage humidity:	<80%HR

6.2.2. EMC and LVD

This meter is designed and tested in compliance to the requirements of the European EMC Directive 89/336/EEC modified with 93/68/CEE and in accordance to Low Voltage Directive 73/23/EEC

6.3. ACCESSORIES

6.3.1. Standard accessories

The package contains:

- Pair of test leads
- User's manual
- Battery
- Carrying Case

7. SERVICE

7.1. WARRANTY CONDITIONS

This instrument is guaranteed against material or production defects, in accordance with our general sales conditions. During the warranty period the manufacturer reserves the right to decide either to repair or replace the product.
Should you need for any reason to return back the instrument for repair or replacement take prior agreements with the local distributor from whom you bought it. Do not forget to enclose a report describing the reasons for returning (detected fault). Use only original packaging. Any damage occurred in transit due to no original packaging will be charged anyhow to the customer.
The manufacturer will not be responsible for any damage to persons or things.

The warranty doesn't apply to:

- Accessories and batteries (not covered by warranty).
- Repairs made necessary by improper use (including adaptation to particular applications not provided in the instructions manual) or improper combination with incompatible accessories or equipment.
- Repairs made necessary by improper shipping material causing damages in transit.
- Repairs made necessary by previous attempts for repair carried out by unskilled or unauthorized personnel.
- Instruments for whatever reason modified by the customer himself without explicit authorization of our Technical Dept.

The contents of this manual may not be reproduced in any form whatsoever without the manufacturer's authorization.

Our products are patented and our logotypes registered. We reserve the right to modify specifications and prices in view of technological improvements or developments which might be necessary.

7.2. AFTER-SALE SERVICE

Shouldn't the instrument work properly, before contacting your distributor make sure that batteries are correctly installed and working, check the test leads and replace them if necessary. Make sure that your operating procedure corresponds to the one described in this manual.
Should you need for any reason to return back the instrument for repair or replacement take prior agreements with the local distributor from whom you bought it. Do not forget to enclose a report describing the reasons for returning (detected fault). Use only original packaging. Any damage occurred in transit due to non original packaging will be charged anyhow to the customer.
The manufacturer will not be responsible for any damage to persons or things.

''