PART#	QTY	DESCRIPTION
TUB ASSY	1	16 GA. 200 OR 300 SERIES S.S.
SHELF	1	18 GA. 200 OR 300 SERIES S.S.
LEGS	4	16 GA. WALL 1 1/2" SQ S.S. TUBING
LEVELERS	4	FLANGED BULLET FOOT

Avante
Animal Health

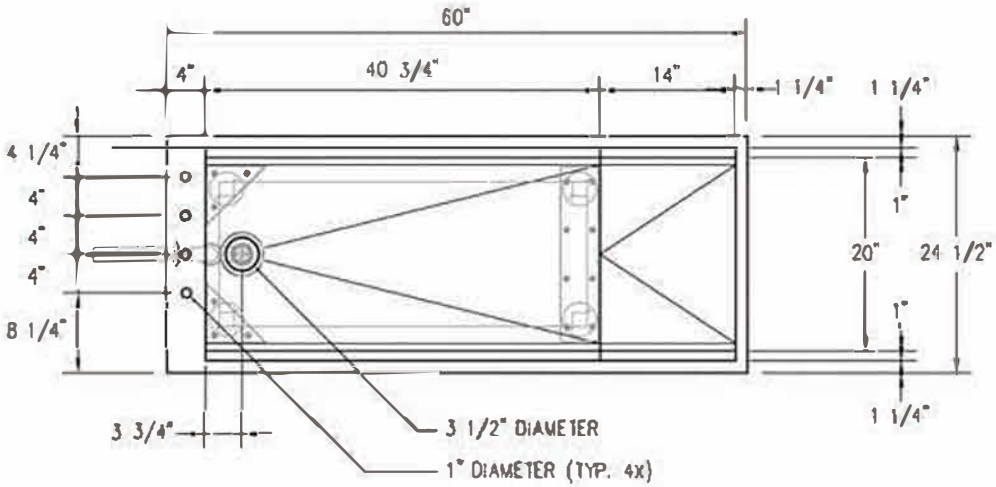

PLAN VIEW

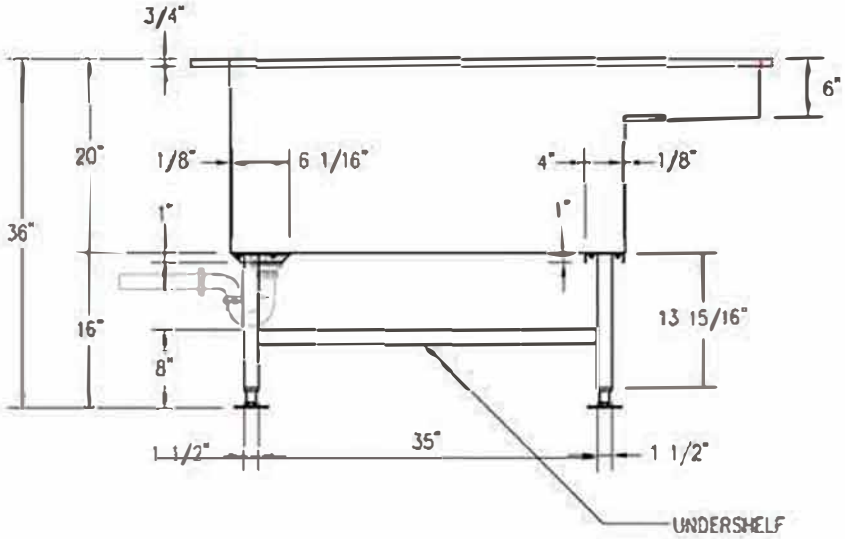

FRONT ELEVATION

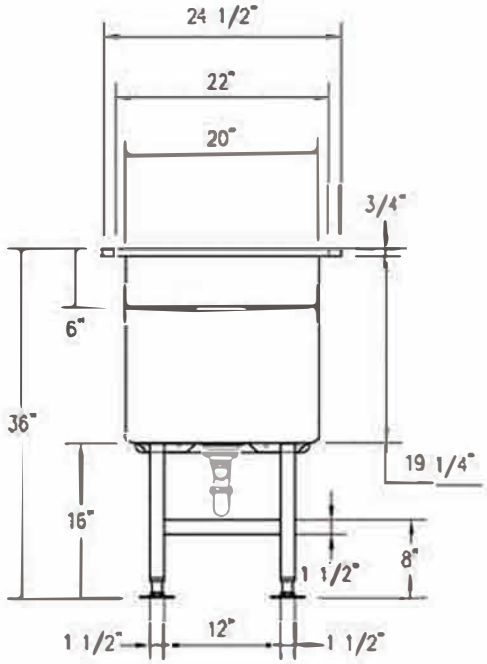

SECTION VIEW

REV.	DATE	BY	DESCRIPTION

NSF UL

CUSTOMER: VETERINARY

PRODUCT: BI-LEVEL WET TABLE 60" X 24-1/2" X 36"H
CUSTOM VERSION – 20" DEEP W/UNDERSHELF

SCALE: NTS
DATE: 12/07/2011
DR. BY: KEC