www.orphancameras.com

Ziegemeyer & Co., Bünde i. W.

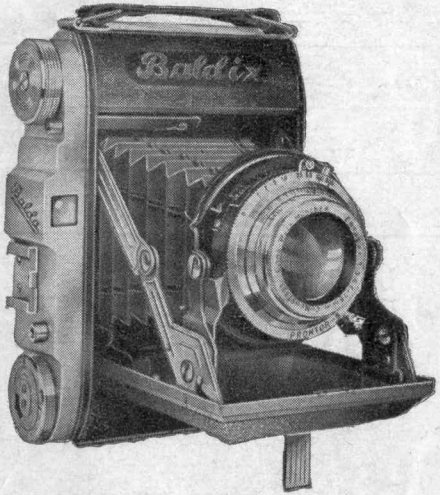

BALDIX

www.orphancameras.com

In order to avoid difficulty and trouble in operating the Camera due to improper handling, we suggest that the working instructions be read carefully before using the Camera

Balda-Kamera-Werk
Bünde (Westf.)

Working instructions for the

BALDIX

Folding Camera

$2^1/_4$" × $2^1/_4$"

(6 cm × 6 cm)

www.orphancameras.com

ILLUSTRATION 1

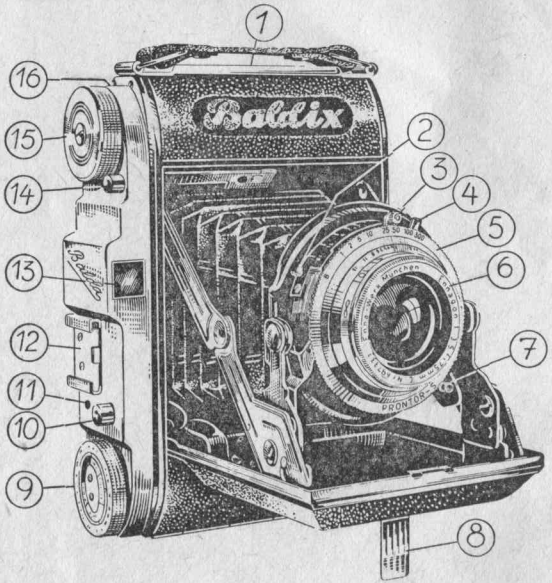

1. Lock for Camera back 2. Aperture Setting 3. Cocking Lever 4. Synchronised Flashlight socket 5. Time Setting Ring 6. Front Lens Mounting with Distance Scale 7. Delayed Action Release 8. Table Support 9. Film Type Indicator 10. Body Release with Thread for Wire Release 11. Double Exposure Indicator 12. Shoe for Range finder or Flashgun 13. Optical Viewfinder 14. Camera Opening Button 15. Film Winding Knob 16. Exposure Counter

ILLUSTRATION 2

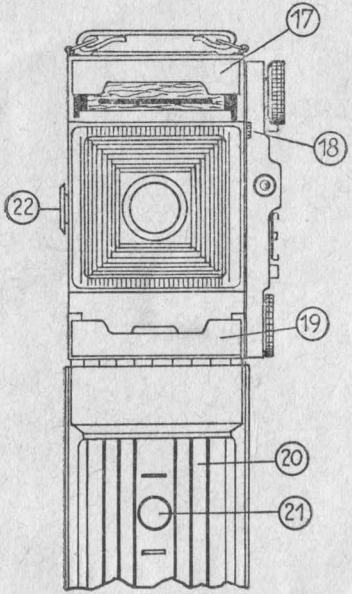

17. Film Chamber (Upper)
18. Exposure Counter Lever
19. Film Chamber (Lower)
20. Film Pressure Plate
21. Film Window with Protective Slide
22. Tripod Bush

www.orphancameras.com

Film material

The usual 120 Roll Film should be used for Baldix.

Insertion of Film

Unlock the Camera by pressing the lock (1) to the side, and the hinged back can be opened. The Lower Film Chamber (19) is hinged and should be slightly raised

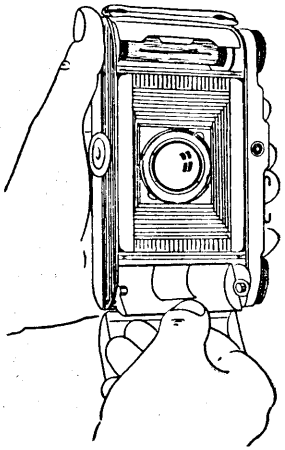

ILLUSTRATION 3

(ILL. 3) in order to engage the new Film spool on the small protruding knob in the spool chamber. Downward pressure upon the Film chamber will ensure the Film is held firmly in place. Break the

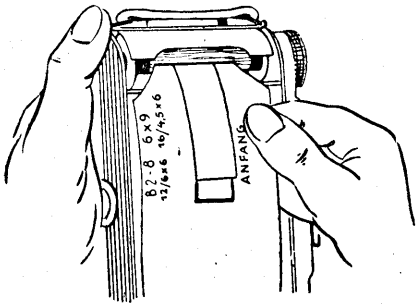

ILLUSTRATION 4

protective paper covering and unwind the Film sufficiently for the tongue to be inserted in the empty spool in the upper chamber (17). The paper tongue should be inserted in the long slot of the empty spool (ILL. 4). At this stage please ensure the coloured side of the protective paper is showing towards you. Turn the Film

www.orphancameras.com

winding knob (15) 2 to 3 times so the Film becomes tight. **It is very important the Film runs straight between the edges of the spool.**

Insertion of Film

To wind the film during loading — and until the film number '1' shows in the back film window (21) — turn the film winding knob (15) back and forth (like winding a watch).

Close the Camera back tightly

Open the protective slide (21), wind the film until No 1 appears in the window- Close the protective slide — After every exposure wind to the next number.

Film Transport

When the film has been loaded — so that the film number '1' appears in the back film window — close the protective slide.

To set exposure counter to '1': Slide toothed lever located near winding knob

towards viewfinder; while holding toothed lever (18) in this position turn winding knob (15) counter-clockwise as far as it will go. The number '1' will click into place (16). The camera is now ready for the first exposure.

After each exposure: Turn film winding knob forward (clockwise) as far as it will go — then **turn back** (counter-clockwise) until it locks automatically.

The Baldix is now ready for the next exposure, and the next exposure number is automatically set in the exposure counter window (16).

There is an alternative way of transporting the film by turning the winding knob (15) backwards and forward like winding up a watch, but in this case one must watch for the next exposure number to appear in the red film window (21).

One should get used to transporting the film immediately after each exposure and turn knob (15) backwards until it locks automatically.

www.orphancameras.com

ATTENTION.

WHEN TRANSPORTING THE FILM IT IS VERY IMPORTANT TO WATCH THAT THE FILM COUNTING MECHANISM WILL ONLY WORK WHEN THE BODY RELEASE HAS BEEN RELEASED.

IF THIS POINT IS NOT CAREFULLY OBSERVED, THE FILM WILL BE TRANSPORTED WITHOUT BEING EXPOSED.

Removal of Film

After the last exposure has been taken wind the Film Winding knob (15) until the end of the film has passed the window (21). Open the back of the Camera, as explained earlier, and wind the film as far as possible. Pull out the Film wind knob (15), lift up the hinged Upper Film Chamber (17) and take out the Film. Seal the film with the attached tongue of adhesive paper. The empty spool should be transferred to the Upper Film Chamber (17). Ensure the Film Winding Knob has clicked firmly into the slotted end of the empty spool — Close the Camera.

Never insert a new Film in bright sunshine.

Opening the Camera

Press the Camera Opening Button (14) and the front of the Camera will open and drop into position. To ensure the Camera is properly open press the front down until it clicks.

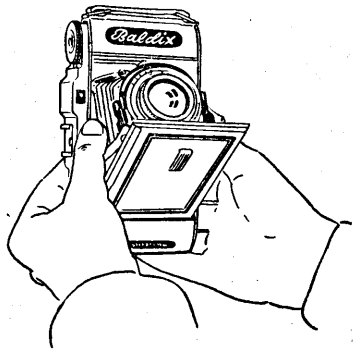

ILLUSTRATION 5

www.orphan[redacted]meras.com

Closing the Camera

Always set lens at ∞ (Infinity) before closing.

Hold the Camera firmly in both hands and press slowly with thumbs against the Upper spread-open brackets, and the Camera will close gently (ILL. 5).

Setting the Camera

Distance has to be ascertained before every exposure, therefore, the Front Lens Mounting (6) has to be adjusted accordingly.

Set correct camera-to-subject distance by turning lens until number of feet is opposite the black diamond pointer of the lens collar.

The same applies to the aperture setting (2). The tongue of the Aperture setting adjustment should always be directly opposite one of the figures. Between values of the Aperture setting have to be estimated.

A Range Finder will be helpful in determining correct distances.

The Exposure Time can be adjusted by turning the Time Setting ring (5). An Exposure Meter will be very helpful in obtaining exact exposure data. Cock the Shutter Cocking lever (3) and the Camera is ready.

Ever-ready setting

The Lens mount (6) has a red dot which enables the Camera to be ready for use at any time. Put the tongue of the Aperture Setting Adjustment (2) and the Distance Ring (6) of the Front Lens mounting opposite the Red Dot. With this Ever-ready setting the Camera is always focussed.

(See Depth of Field Indicator — Page 15).

www.orphan[illegible]meras.com



ILLUSTRATION 6

Exposure

Hold the Camera close to the eye with both hands and aim at your subject by looking through the built-in Optical Viewfinder (13) (ILL. 6).

The Body Release (10) works on an even pressure (Thus avoiding all forms of Camera shake).

Double Exposure Prevention

When making the exposure (as shown on page 13), always "squeeze" the body shutter release DOWN ALL THE WAY – this automatically locks the release (and shows a small red signal (11) until the film has been advanced for the next exposure.

Automatic Double Exposure Prevention

The body shutter release locks automatically after each exposure. It remains locked — and a red signal shows near the release button (10) — until the film is advanced for the next exposure.

IMPORTANT

The Body Release (10) **should never be pressed if the Shutter is not cocked,** otherwise the Camera may be damaged. When taking an Exposure hold the

www.orphancameras.com

Camera very firmly to avoid moving it when pressing the Body Release (10) with the index finger.

Time Exposures

When taking Time Exposures or using the Delayed Action Release (7) use either a Tripod (22) or place the Camera on a table or a solid surface. For a Time Exposure set the Time Setting Ring (5) on B, press the Body release (10) and hold it down for the desired length of time. To close the Shutter remove the finger from the Body release. The shutter will remain open as long as the Body release is held down. For Time Exposures of great length, a cable release (10) with a set screw lock will be of great help.

Flashlight Exposures

The Shutter is synchronised for Flash.

When using Flash please observe the instructions supplied with the Bulbs.

Lenses

The powerful coated Lenses have an anti-reflex coating. This coating is very hard and it is essential the surfaces of the Lenses are always kept clean and treated carefully to avoid damage to the quality of the Lens.

The Lenses are particularly suited for colour photography.

Film Type- and - Speed Indicator

To remind you of the type of film loaded in the camera, set knurled inner disc with pointer towards **film type** (dark field indicates indoor color film); set **film speed** on outer ring opposite film type.

To Use Cable Release

Screw cable into thread of body shutter release knob. (10)

Depth of Field Indicator

The numbers engraved on each side of the diamond pointer of the lens collar can be used with the lens distance scale to indicate depth of field as follows:

www.orphancameras.com

Focus the lens in the usual manner so that the camera-to-subject distance (in feet) is at the diamond pointer. To the left and right of the pointer, opposite the numbers representing lens opening used, read the distances of the nearest and farthest objects that will be satisfactorily sharp.

EXAMPLE:

With a camera-to-subject distance of 15 ft., and a lens opening of f/8, objects from 10 ft. to slightly over 25 ft. will be sharp. If lens opening f/16 is used with the same (15 ft.) distance setting, objects from 8 ft. to ∞ (Infinity) will be sharp.

