4 TO 20 mA OUTPUT LVDT DISPLACEMENT TRANSMITTERS

OMEGA™

LD630 Series

1 YEAR WARRANTY

- Less Than 0.2% Linearity
- 5 to 300 mm Travel Lengths Available
- 4 to 20 mA or 20 to 4 mA Versions Available
- Rugged Stainless Steel Body Construction
- Guided Core with Removable Spring
- IP67 Environmental Rating

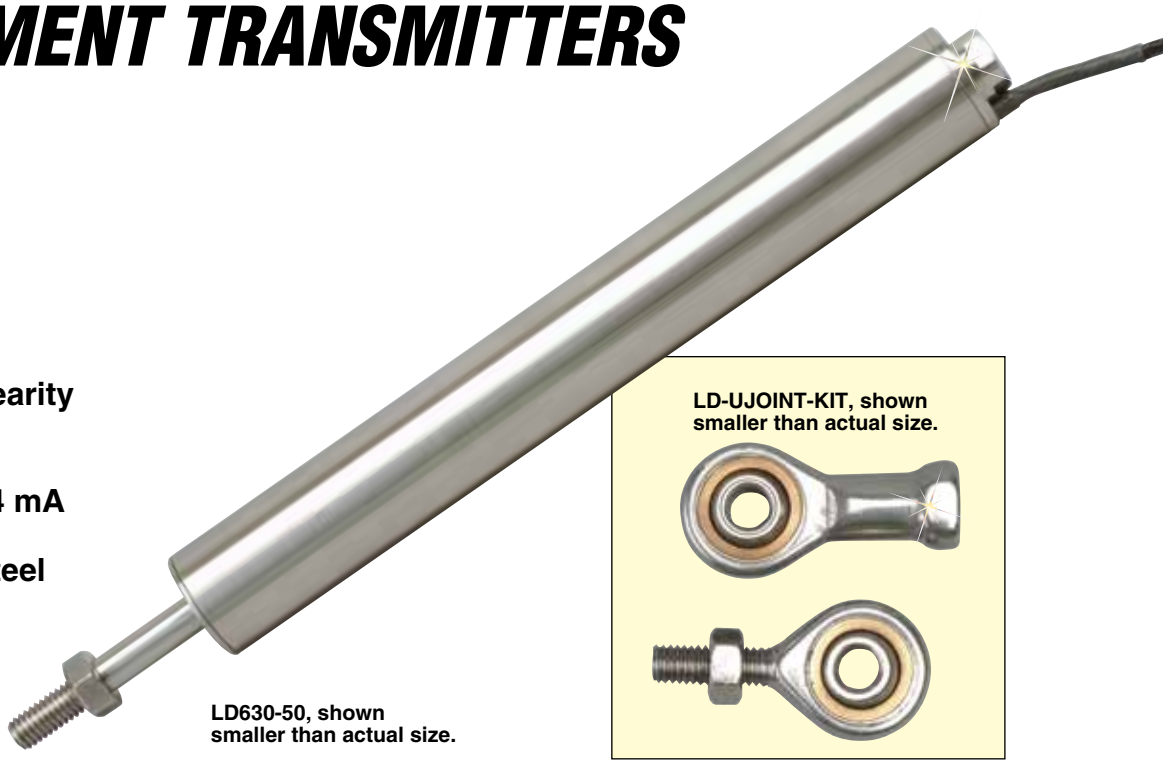

LD630-50, shown smaller than actual size.

LD-UJOINT-KIT, shown smaller than actual size.

The LD630 Series current output displacement transmitters have improved IP67-rated sealing, coupled with polymer guides with rigid carriers. These transmitters are accurate and reliable, especially in wet and corrosive conditions. Output options are either direct-acting 4 to 20 mA or reverse-acting 20 to 4 mA. The direct-acting model will have 4 mA output when the guided core is fully out, and the output will increase to 20 mA when fully in.

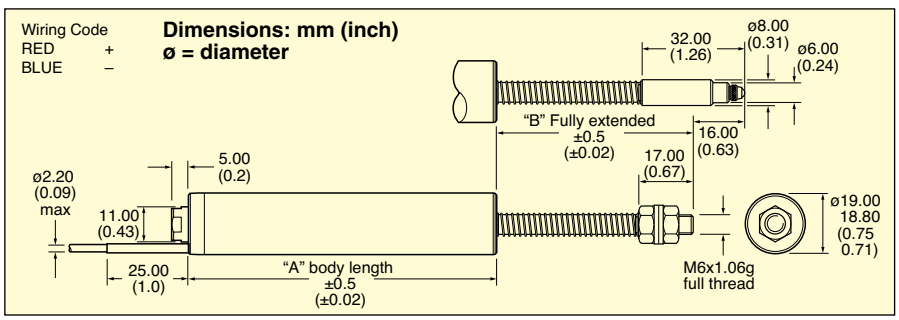

To Order

MODEL NO.	RANGE: mm (inch)	"A" DIM mm (inch)	"B" DIM mm (inch)
LD630-5	0 to 5 (0 to 0.2)	94.0 (3.7)	35.3 (1.4)
LD630-10	0 to 10 (0 to 0.4)	113.5 (4.5)	46.3 (1.8)
LD630-15	0 to 15 (0 to 0.6)	120.7 (4.8)	50.3 (2.0)
LD630-20	0 to 20 (0 to 0.8)	135.0 (5.3)	61.3 (2.4)
LD630-30	0 to 30 (0 to 1.2)	149.4 (5.9)	79.3 (3.1)
LD630-50	0 to 50 (0 to 2.0)	170.9 (6.7)	102.3 (4.0)
LD630-100	0 to 100 (0 to 3.9)	228.5 (9.0)	160.3 (6.3)
LD630-150	0 to 150 (0 to 5.9)	278.7 (11.0)	231.3 (9.1)
LD630-200	0 to 200 (0 to 7.9)	336.2 (13.2)	291.2 (11.5)
LD630-300	0 to 300 (0 to 11.8)	450.9 (17.8)	457.3 (18.0)

*To order reverse-acting version (20 to 4 mA), add suffix **"-R"** to model number, no additional charge.*

***Ordering Example: LD630-10-R,** 0 to 10 mm (0 to 0.4") displacement transmitter with reverse 20 to 4 mA output.*

SPECIFICATIONS

Linearity: <0.2% FSO
Excitation Voltage: 10 to 30 Vdc
Output: 4 to 20 mA
Output Ripple: 0.02% FSO
Bandwidth: 500 Hz (-3 dB)
Storage Temp: -20 to 85°C (-4 to 185°F)
Operating Temp: 0 to 65°C (32 to 149°F)
Vibration (Sinusoidal Frequency):
10 to 50 Hz: 1 to 10 g rms linear amplitude
50 Hz to 1 kHz: 10 g rms amplitude
Shock:
Drop Testing: 1 m (3') onto hard surface
Topple Testing: 10 times each end onto hard surface
Cable: PFA, 2 m (6') long
Core Material: Nickel-iron

ACCESSORIES

MODEL NO.	DESCRIPTION
LD-TIP	Tip adaptor/ball tip
LD-UJOINT-KIT	U-joint retro fit kit