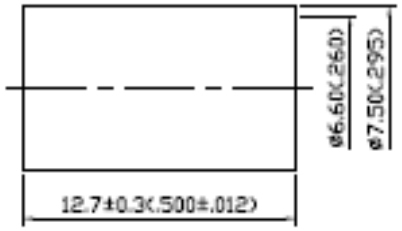

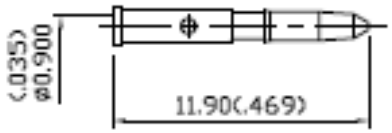

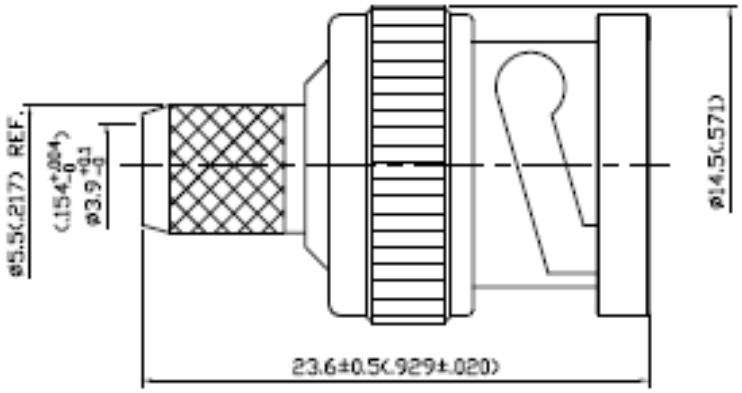

1.0 ELECTRICAL

1.1 FREQUENCY RANGE: DC–4 GHz
1.2 NOMINAL IMPEDANCE: 75 OHM
1.3 WORKING VOLTAGE: 300 VOLTS MAX.
1.4 PROOF VOLTAGE: 1000 VOLTS
1.5 VSWR: 1.1 MAX.

2.0 MATERIALS

2.1 BODIES: BRASS PER JIS–C3604
2.2 CENTER CONTACT: BRASS PER JIS–C3604
2.3 INSULATION: TEFLON PER ASTM D1457 AND ASTM D1710
2.4 CRIMP FERRULE: BRASS PER JIS–C2700

3.0 FINISHES AND OTHERS

3.1 SEE BELOW TABLE FOR DETAILS.

4.0 MECHANICAL

4.1 FOR USE WITH 1506A OR SIMILAR STYLE CABLE
4.2 CABLE ATTACHMENT: OUTER: CRIMP, INNER: SOLDER
4.3 REQUIRED DIMENSION OF CRIMP TOOL: CONTACT :SOLDER
FERRULE :6.5(.256) HEX. CRIMP TOOL

5.0 ENVIRONMENTAL

5.1 OPERATING TEMPERATURE RANGE: –65° C TO +165° C

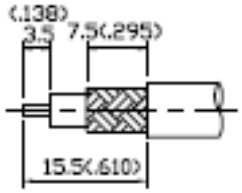

STRIPPING DIMENSION

NO	DESCRIPTION	MATERIAL	Q'TY	FINISH
9	CENTER CONTACT	BRASS	1	GOLD
8	CRIMP FERRULE	BRASS	1	NICKEL
7	SHELL	ZINC	1	NICKEL
6	INSULATION	TEFLON	1	NONE
5	GASKET	SILICONE	1	NONE
4	WASHER	BRASS	1	NICKEL
3	SPRING WASHER	BERYLLIUM COPPER	1	NONE
2	WASHER	BRASS	1	NICKEL
1	BODY	BRASS	1	NICKEL 100μ" MIN.

APPROVED by _____ DATE: _____

DESCRIPTION	BNC STRAIGHT PLUG CRIMP								
製圖 DRAWN	Yoko	TOLERANCE		品名 TITLE	13-10-73 T.G.Z \ROHS COMPLIANT	BEL DEN 1505A (750)	日期 DATE	05.17.10'	版次 REV. A-0
檢圖 CHECK	Arc	.X	±0.2	單位 UNIT	mm(in)	DWG.NO.	13-0231		
認定 APPROVAL	Lewis	.XX	±0.1						
		.XXX	±0.05	比例 SCALE	4:1				
		ANGLE	±5°						