NO	DESCRIPTION	DATE
1	ADD MIS PART NO.	04.01.04
2	ADD DESCRIPTION ADD 1.98±0.38 61.12±0.13 → 61.12±0.25 52.81±0.13 → 52.81±0.25 ø3.05 → ø3.05±0.25 11.3 → 11.2±0.25 15.4 REF. → 15.37±0.38 2.77 → 2.77±0.38 55.32 REF. → 55.3±0.38 1 → 1±0.25 (5.84) → 5.83±0.38 14 REF. → 13.57±0.38 11 REF. → 10.82±0.38 3.3 REF. → 2.8±0.7 2.84 → 2.84±0.38 MIS PART NO. → P/N	03.17.08

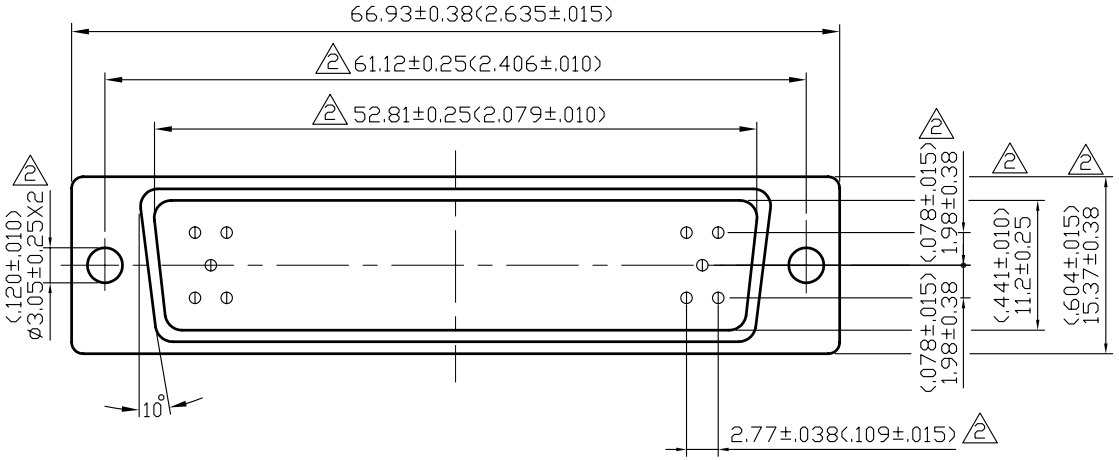

CONTACT TYPE — FORMED CONTACT
COLOR OF INSULATION — WHITE PBT GLASSFIBRE REINFORCED
PLATING OF CONTACT — GOLD <5 MICRO INCHES>
SOLDER TERMINATIONS — TIN
WORKING VOLTAGE — 500V AC AT SEA LEVEL
CONTACT RESISTANCE — 10m OHM MAX.
MATING CYCLES — 150 TIMES
PLUG — DIMPLED

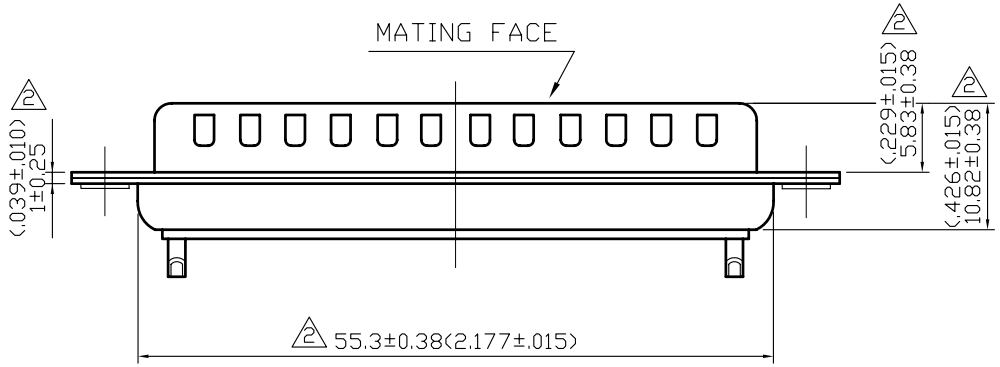

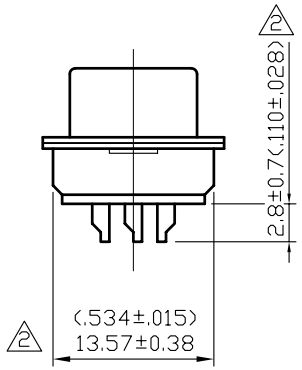

1 2 P/N: 544-3890

APPROVED by _____ DATE: _____

2	DESCRIPTION	D-SUB WITH 50-PIN MALE CONNECTOR BY FORMING						
製圖	DRAWN	TOLERANCE	品名	D50-0050P-F	日期	DATE 02.23.95	版次	REV. A-2
		.X ±0.2	TITLE					
檢圖	CHECK	.XX ±0.1	單位	UNIT mm(in)	DWG.NO.	55-0058		
認定	APPROVAL	.XXX ±0.05	比例	SCALE 2:1				
		ANGLE ±5°						