FEATURES

- UL & CUL approved
- SPST to 4PDT
- Various configurations available
- Sealing boot available with various colors

RS PRO Power Toggle Switch

RS Stock No.: 2066971, 2066972, 2066974, 2067003, 2067004, 2067006, 2066994, 2066996, 2066997, 2067001, 2067002, 2067007, 2066998, 2066999, 2067000, 2066992, 2066993, 2066988, 2066990, 2066982, 2066983, 2066986, 2066987, 2066991, 2066984, 2066985.

RS Professionally Approved Products bring to you professional quality parts across all product categories. Our product range has been tested by engineers and provides a comparable quality to the leading brands without paying a premium price.

Similar Products

Stock No.	Brand	Product Name	Switch Function	Actuator Type	Terminal Type
2066971	RS PRO	POWER TOGGLE SWITCH	SPST ON-OFF	METAL BAT	
2066972	RS PRO	POWER TOGGLE SWITCH	SPST ON-OFF	METAL BAT	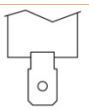
2066974	RS PRO	POWER TOGGLE SWITCH	SPST ON-OFF	PLASTIC BAT	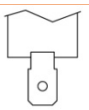
2067003	RS PRO	POWER TOGGLE SWITCH	SPDT (ON)-ON	METAL BAT	
2067004	RS PRO	POWER TOGGLE SWITCH	SPDT (ON)-ON	METAL BAT	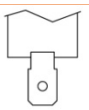
2067006	RS PRO	POWER TOGGLE SWITCH	SPDT (ON)-ON	PLASTIC BAT	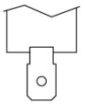
2066994	RS PRO	POWER TOGGLE SWITCH	SPDT ON-ON	METAL BAT	
2066996	RS PRO	POWER TOGGLE SWITCH	SPDT ON-ON	METAL BAT	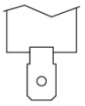
2066997	RS PRO	POWER TOGGLE SWITCH	SPDT ON-ON	PLASTIC BAT	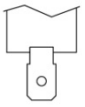
2067001	RS PRO	POWER TOGGLE SWITCH	SPDT (ON)-OFF-(ON)	METAL BAT	
2067002	RS PRO	POWER TOGGLE SWITCH	SPDT (ON)-OFF-(ON)	PLASTIC BAT	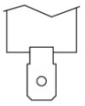
2067007	RS PRO	POWER TOGGLE SWITCH	SPDT (ON)-OFF-ON	METAL BAT	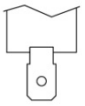
2066998	RS PRO	POWER TOGGLE SWITCH	SPDT ON-OFF-ON	METAL BAT	
2066999	RS PRO	POWER TOGGLE SWITCH	SPDT ON-OFF-ON	METAL BAT	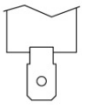

2067000	RS PRO	POWER TOGGLE SWITCH	SPDT ON-OFF-ON	PLASTIC BAT	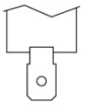
2066992	RS PRO	POWER TOGGLE SWITCH	DPST ON-OFF	METAL BAT	
2066993	RS PRO	POWER TOGGLE SWITCH	DPST ON-OFF	METAL BAT	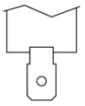
2066988	RS PRO	POWER TOGGLE SWITCH	DPDT (ON)-ON	METAL BAT	
2066990	RS PRO	POWER TOGGLE SWITCH	DPDT (ON)-ON	METAL BAT	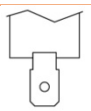
2066982	RS PRO	POWER TOGGLE SWITCH	DPDT ON-ON	METAL BAT	
2066983	RS PRO	POWER TOGGLE SWITCH	DPDT ON-ON	METAL BAT	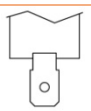
2066986	RS PRO	POWER TOGGLE SWITCH	DPDT (ON)-OFF-(ON)	METAL BAT	
2066987	RS PRO	POWER TOGGLE SWITCH	DPDT (ON)-OFF-(ON)	METAL BAT	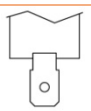
2066991	RS PRO	POWER TOGGLE SWITCH	DPDT (ON)-OFF-ON	METAL BAT	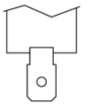
2066984	RS PRO	POWER TOGGLE SWITCH	DPDT ON-OFF-ON	METAL BAT	
2066985	RS PRO	POWER TOGGLE SWITCH	DPDT ON-OFF-ON	METAL BAT	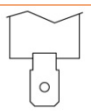

Product Description Attribute

10A 250VAC Power Level, from SPST to 4PDT with a variety of options for actuator, bushing and terminal. Optional locking lever or safety cover to prevent from accidental actuation

Suitable applications:

- *Instrumentation*
- *Shut-off switch*

Package Contain

1 x Power Toggle Switch
2 x Hex Nuts
1 x Washer
2 x Screws

General Specifications

Poles/Throws	SPST
Switch Functions	ON-OFF

Mechanical Specifications

Mechanical Life	Without load, 10,000 cycles min.

Electrical Specifications

Contact Rating	10A @ 250VAC, 15A @ 125VAC
Electrical Life	10,000 make-and-break cycles at full load
Contact Resistance	20m-ohms max. initial @ 2-4VDC, 1A
Insulation Resistance	Apply 500VDC for 1min. After which measurement to be made b/w terminals shall result 200M-ohms min.
Dielectrical Strength	1,500VAC (50Hz-60Hz) for 1 min. shall result no damage to parts arcing or flashover
Operating Temperature	-20Celsius degree to +55Celsius degree

Relaibility Performance

Soldering Heat Resistance	Max soldering temperature @ 260Celsius degree, immersion time 5+/-1sec. No deformation on terminal or surrounding enclosure
Cold Test	Stored at temperature –20(+/-3)Celsius degree for 48 hours, shall result no changes to switch's electrical performance
Hot Test	Stored at temperature +55(+/-3)Celsius degree for 48 hours, shall result no changes to switch's electrical performance
Humidity Test	Stored at temperature 40(+/-3)Celsius degree with relative humidity 90%~95% for 48 hours, shall result no changes to switch's electrical performance
Soldering Temperature	Hand soldering @ 350 Celsius degree for 3sec. max. (No pressure to be applied on terminals)

Protection Category

IP Protection	IP40

Material Characteristics

Actuator	Brass with nickel plating
Bushing	Brass with nickel plating
Base	Phenolic resin molding compound, black
Spring	Steel wire
Contact	Silver alloy
Housing	Iron, nickel plated
Terminals	H1:Bronze with nickel plated, H5:Bronze.
Hardware	Nut (Iron, nickel plated), Washer (Steel, nickel plated) SCREW (Iron, nickel plated)
Label	Mist silver polyester film

Product Handling & Storing

The switch is suitable for power rated applications, rating recommendation is per aforementioned above (Contact rating section)
Problem relates to terminal oxidization can be prevented by storing product in an environment that is dry and cool with the relative humidity less than 90%. Noted, prior to mounting products onto circuit board as well as for unused units, it is recommended to keep them in the bag and with the bag sealed.

Additional Information

Custom Tariff Number	8536500000

Approvals

Declarations	MFR Declaration of Conformity
Hazardous Area Certification	RoHS 2011/65/EU & 2015/863
Standards Met	UL 61058

Stock No. 2066971

Drawing:

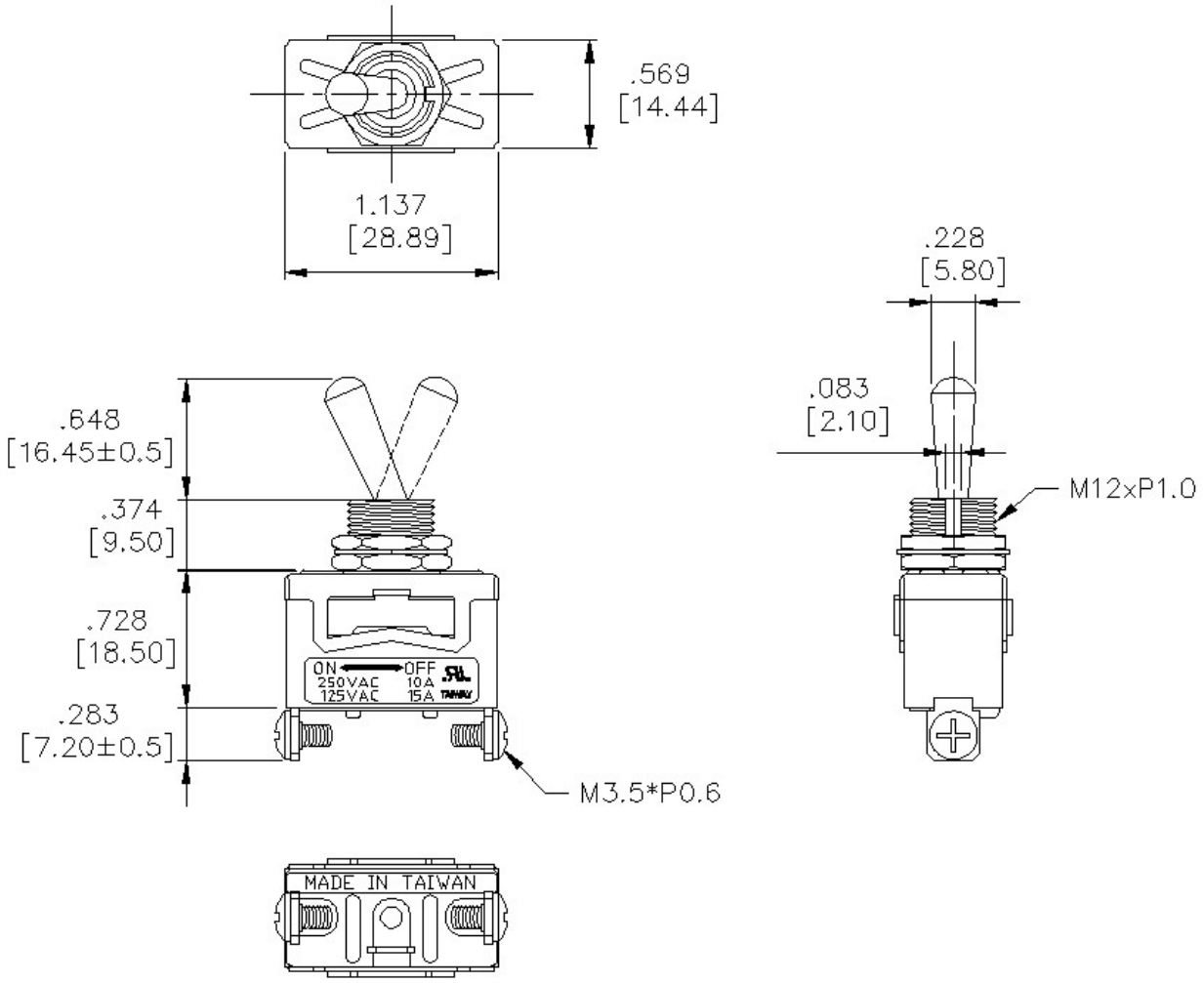

Schematic:

Stock No. 2066972

Drawing:

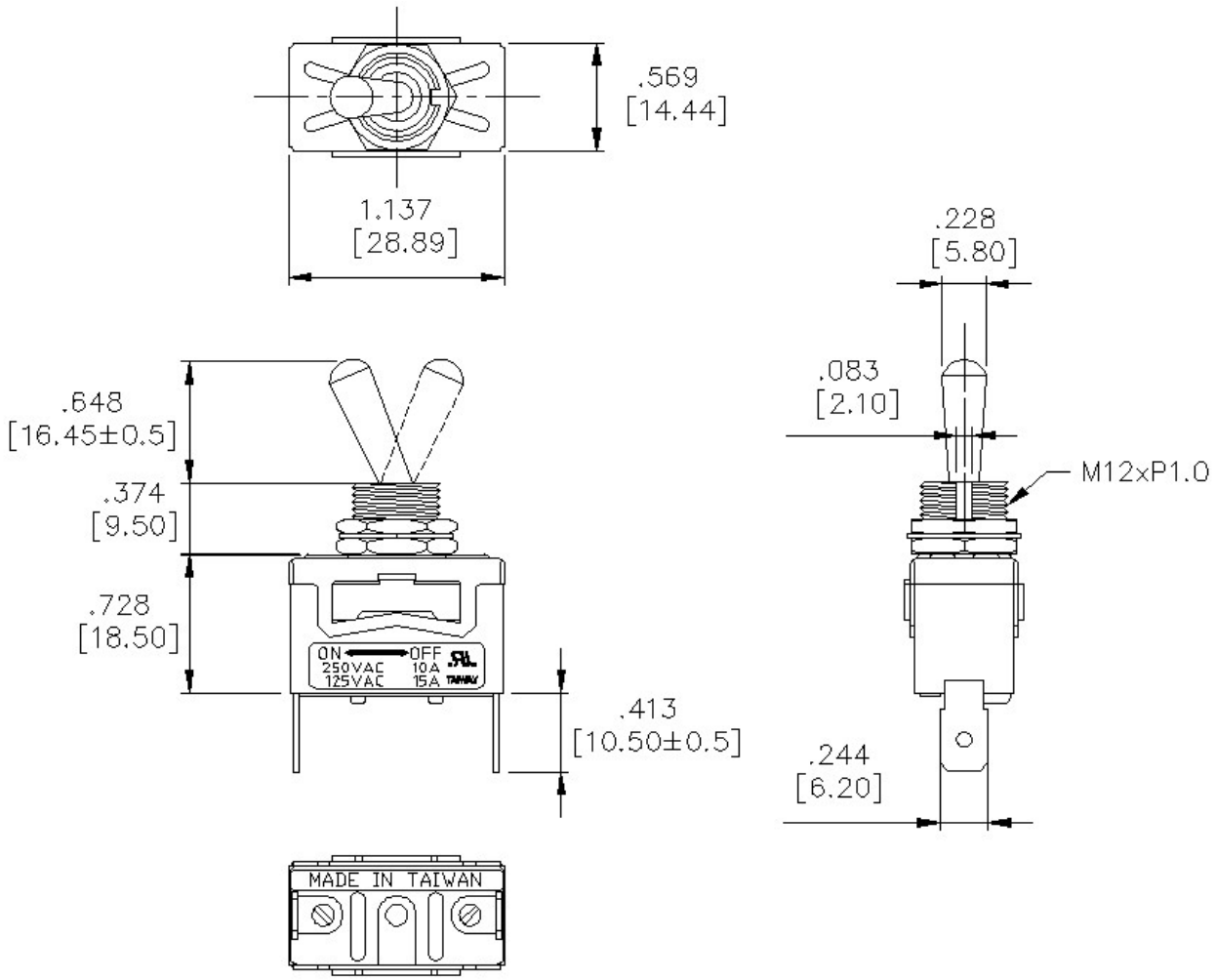

Schematic:

Stock No. 2066974

Drawing:

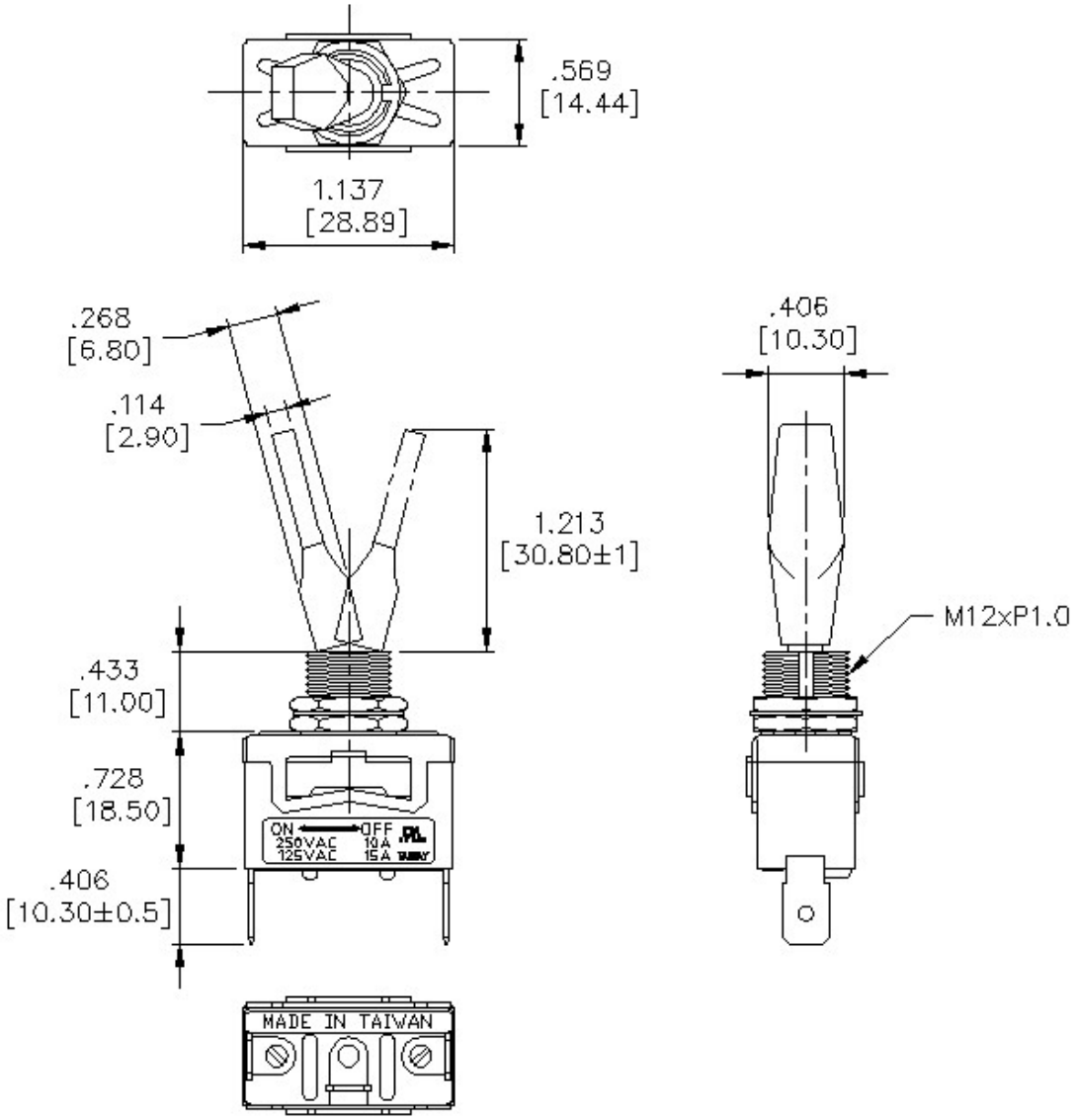

Schematic:

Stock No. 2067003

Drawing:

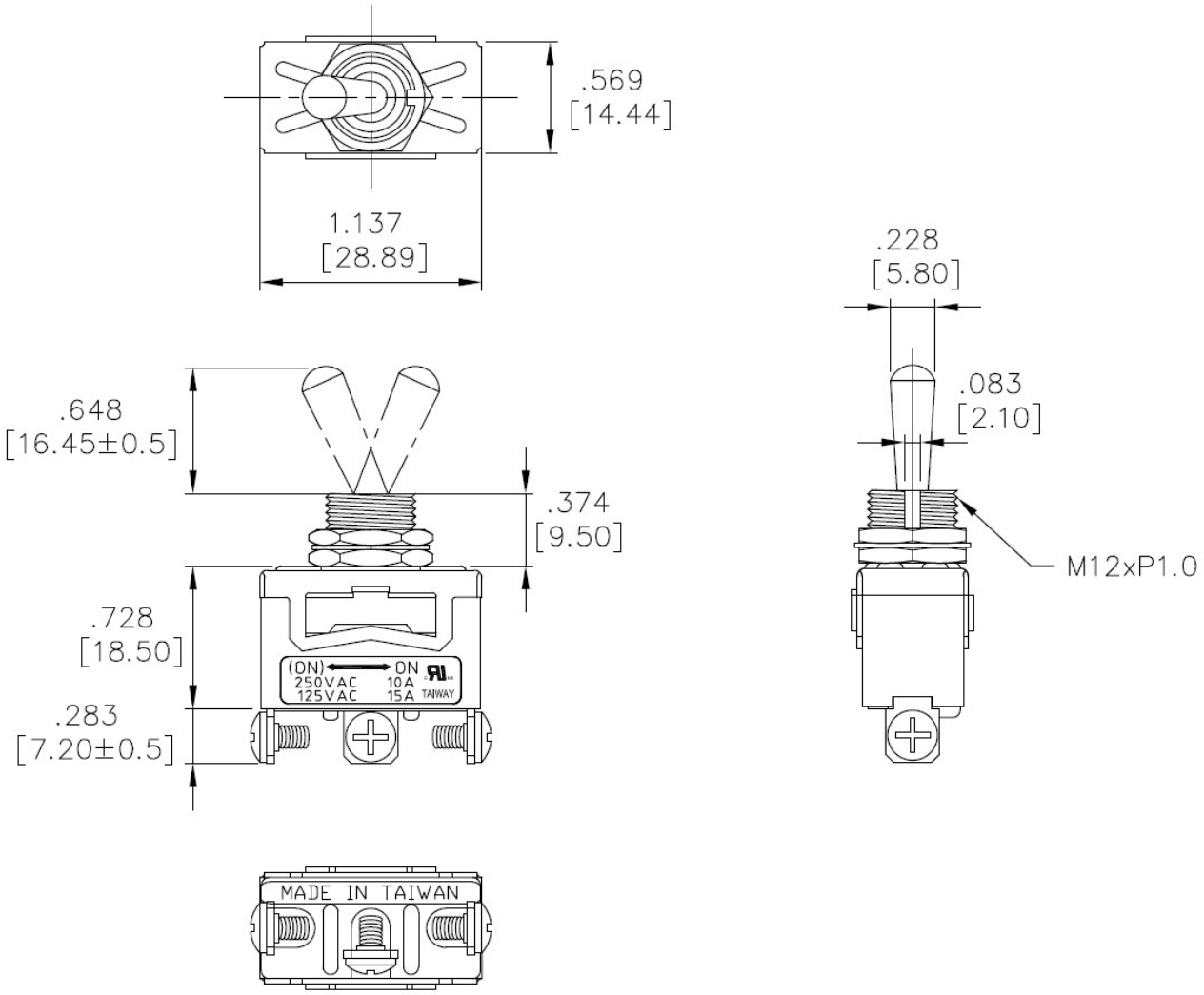

Schematic:

Stock No. 2067004

Drawing:

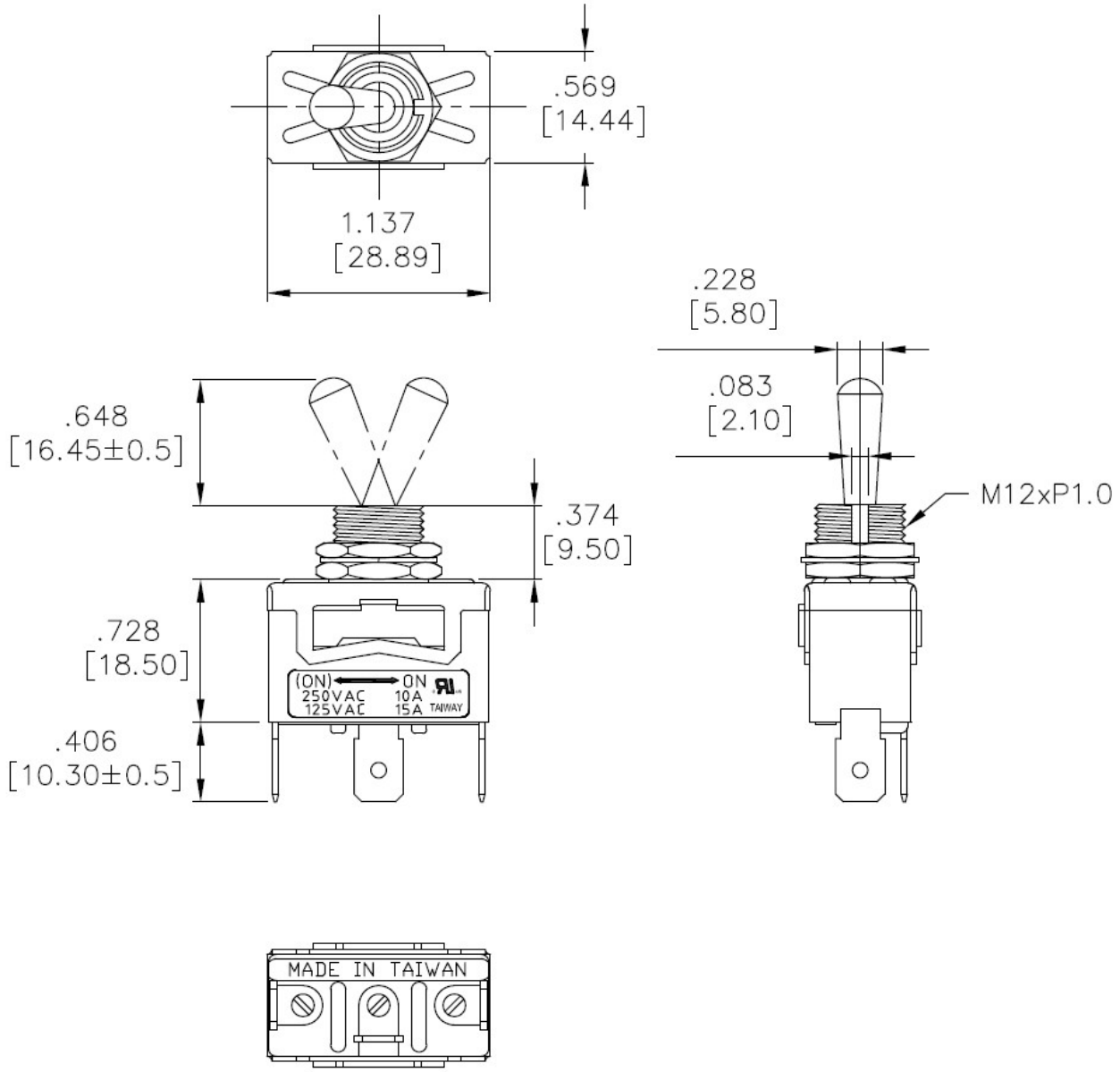

Schematic:

Stock No. 2067006

Drawing:

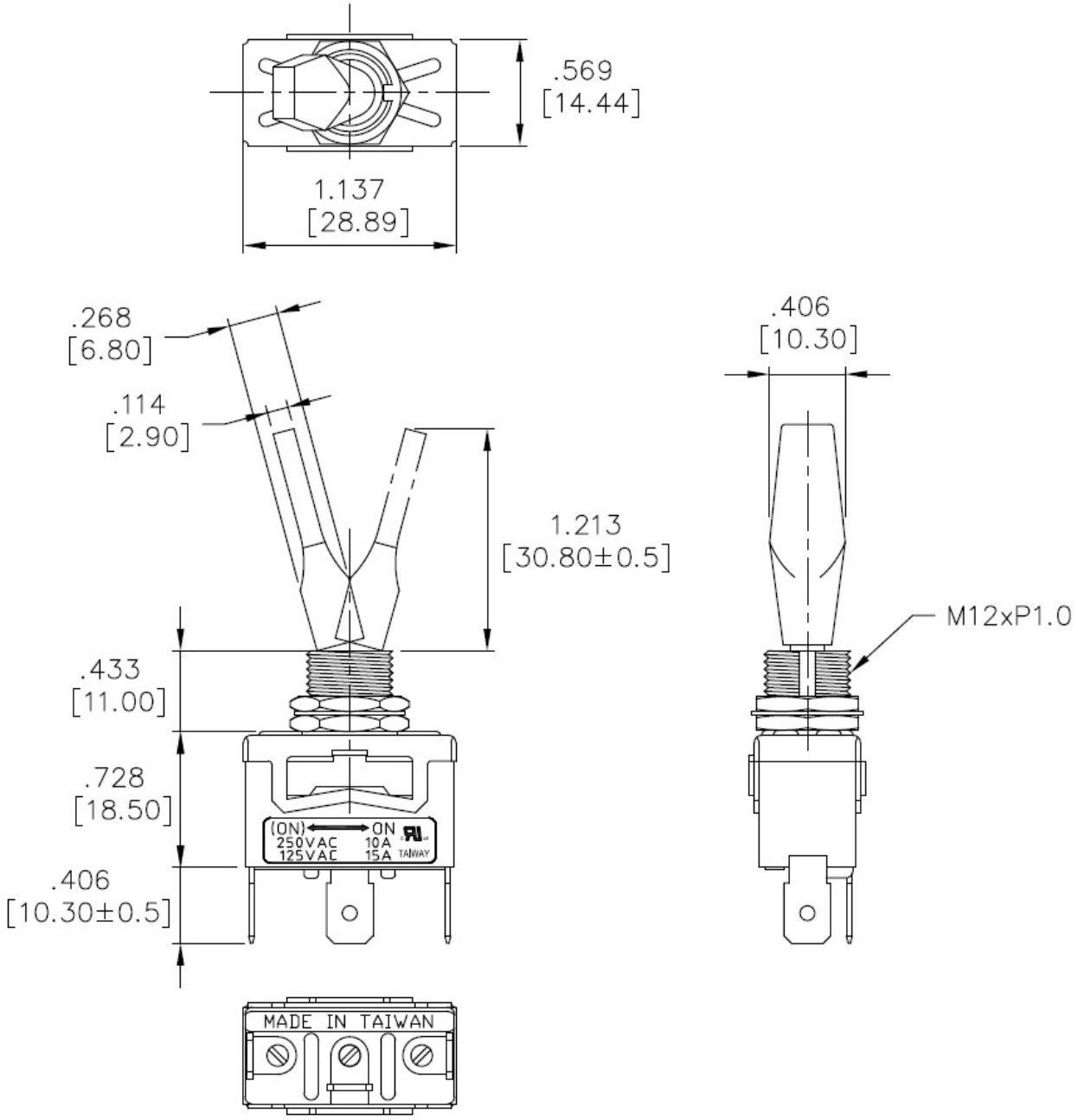

Schematic:

Stock No. 2066994

Drawing:

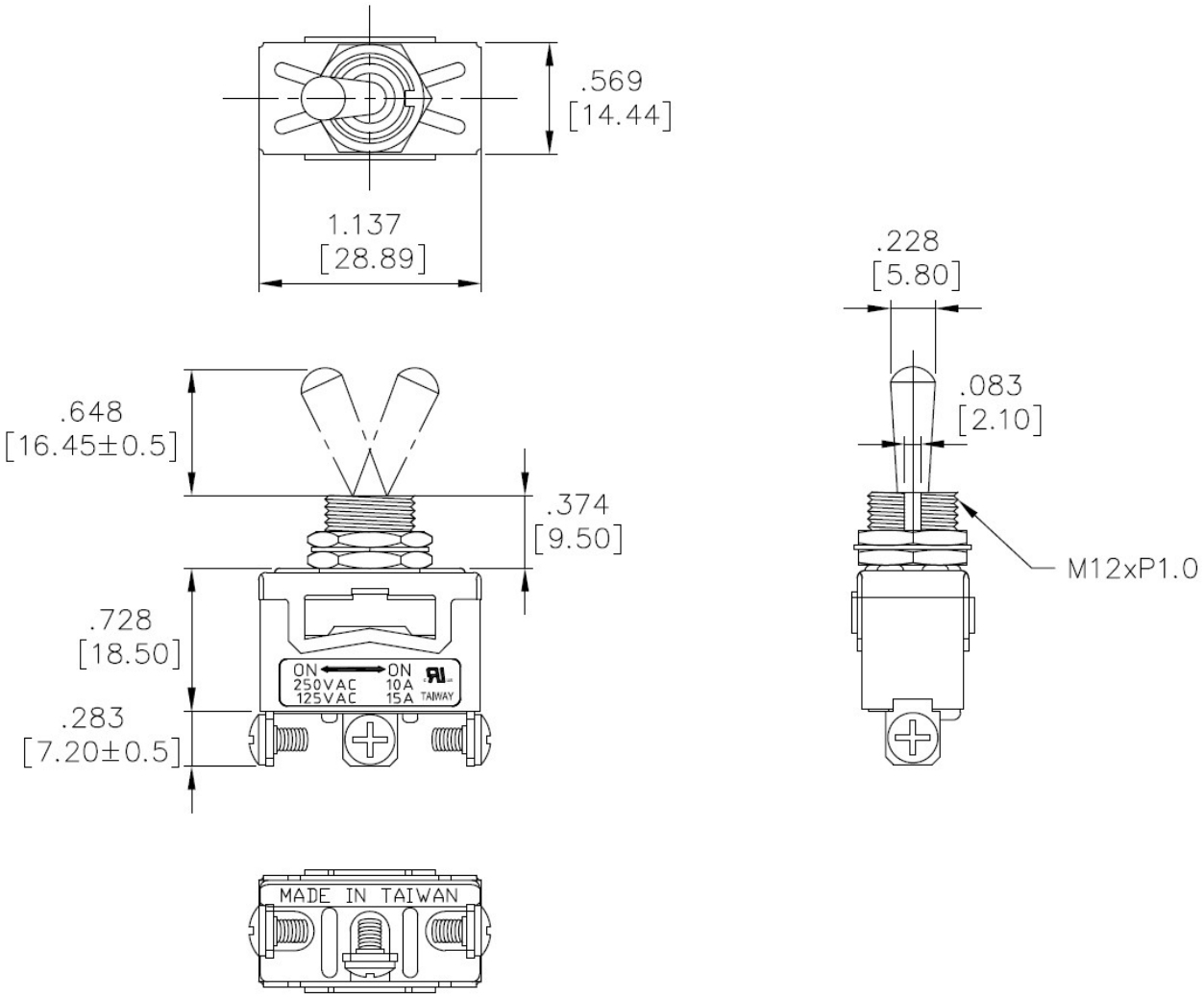

Schematic:

Stock No. 2066996

Drawing:

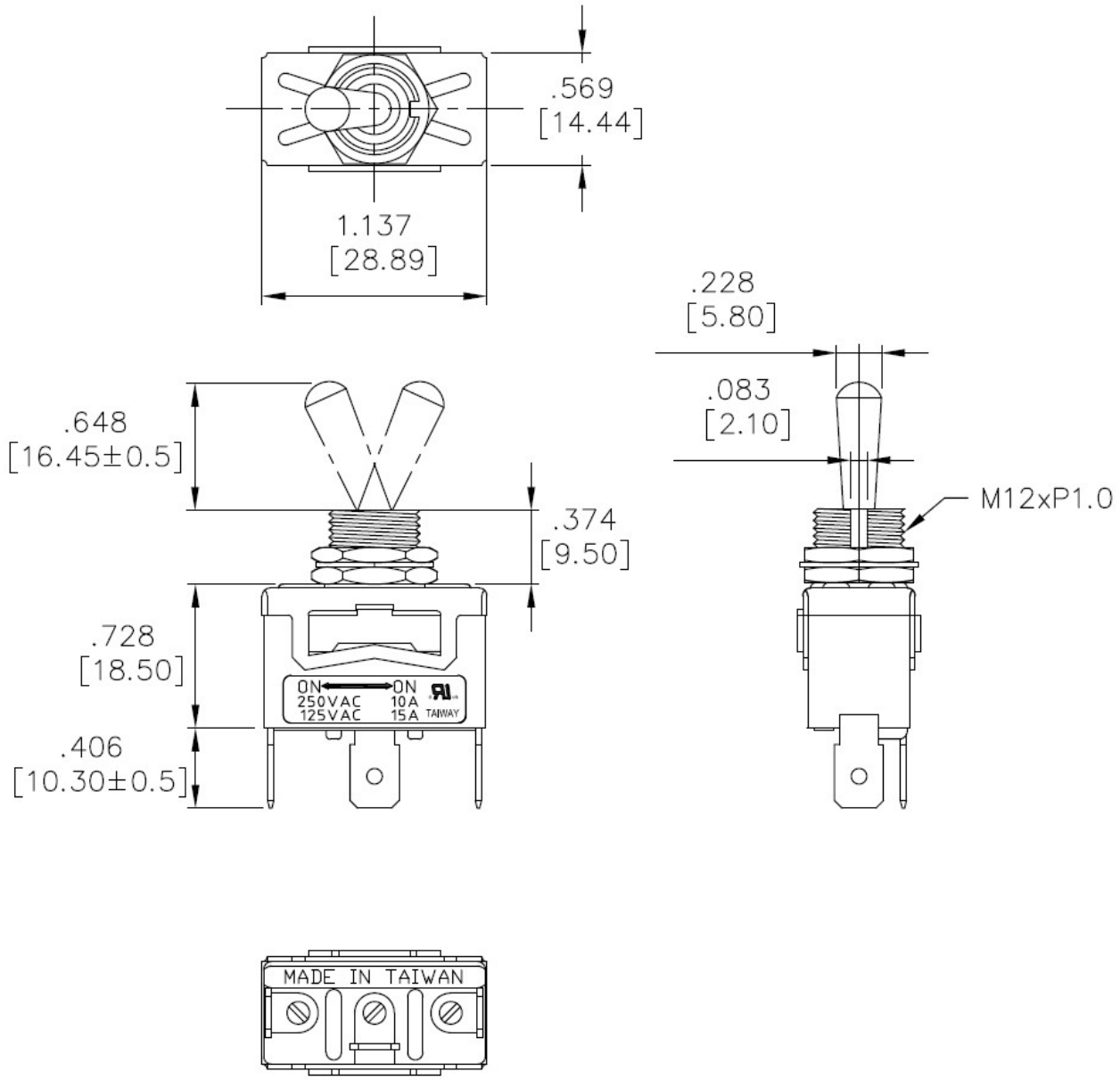

Schematic:

Stock No. 2066997

Drawing:

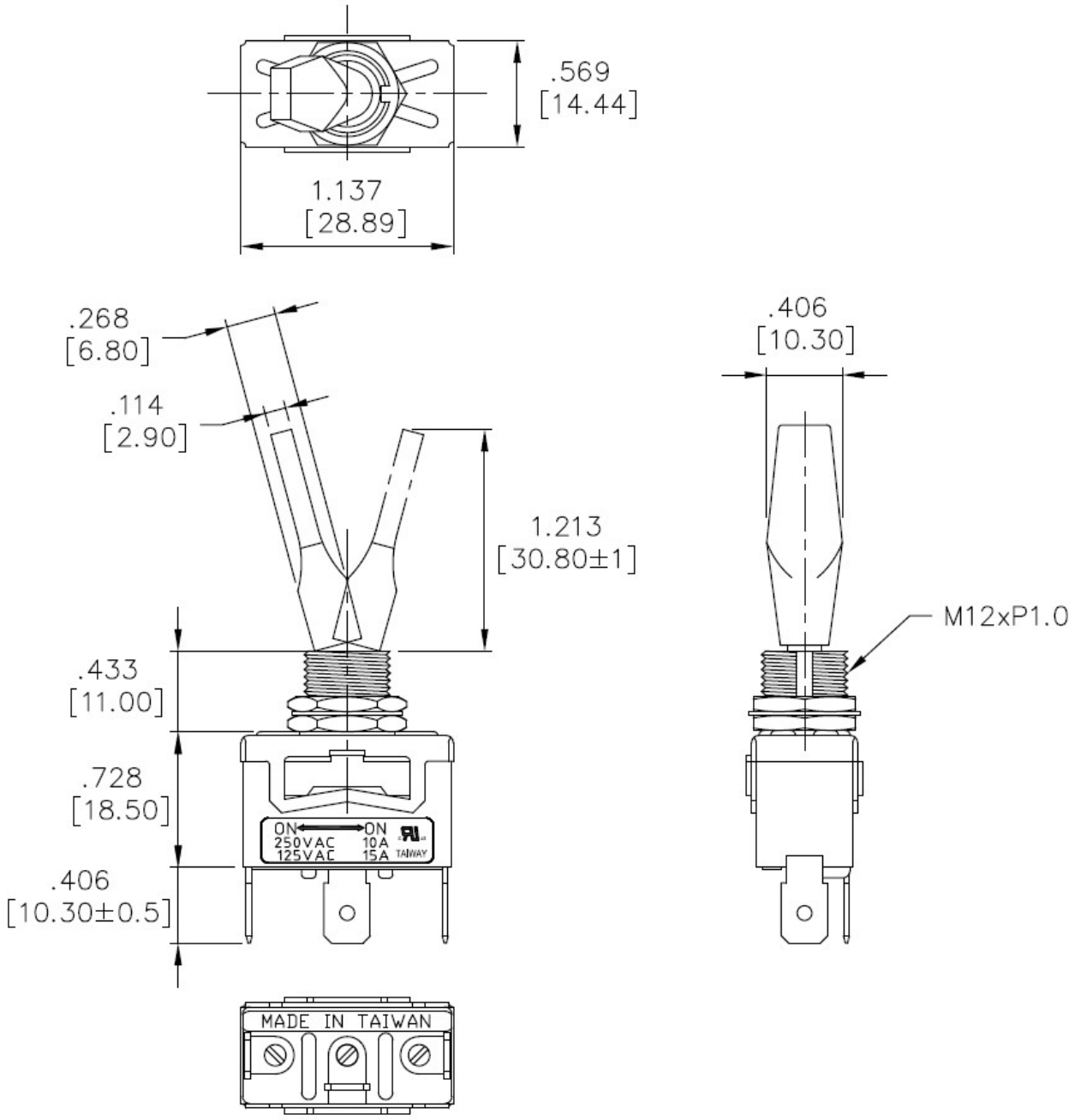

Schematic:

Stock No. 2067001

Drawing:

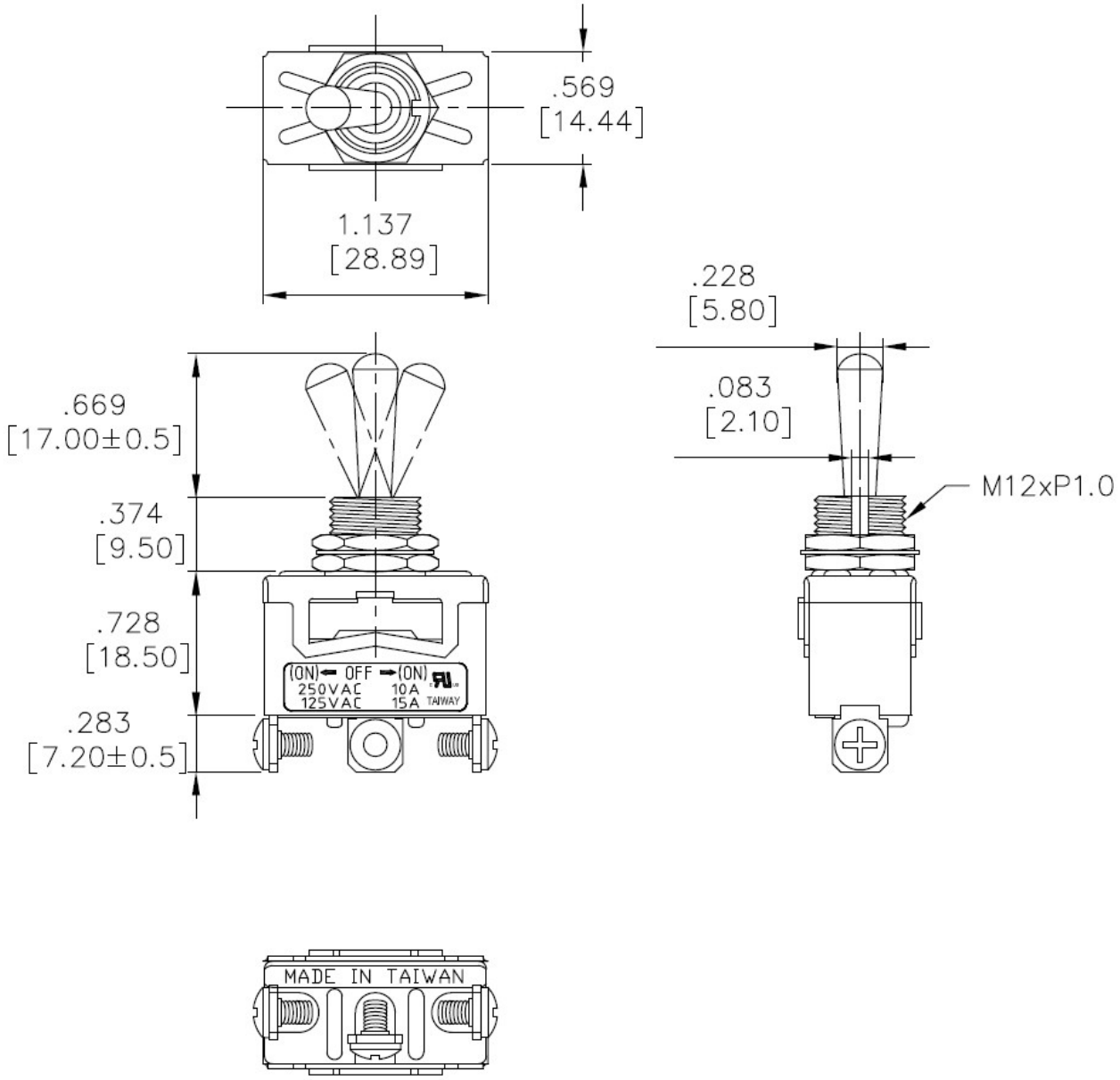

Schematic:

Stock No. 2067002

Drawing:

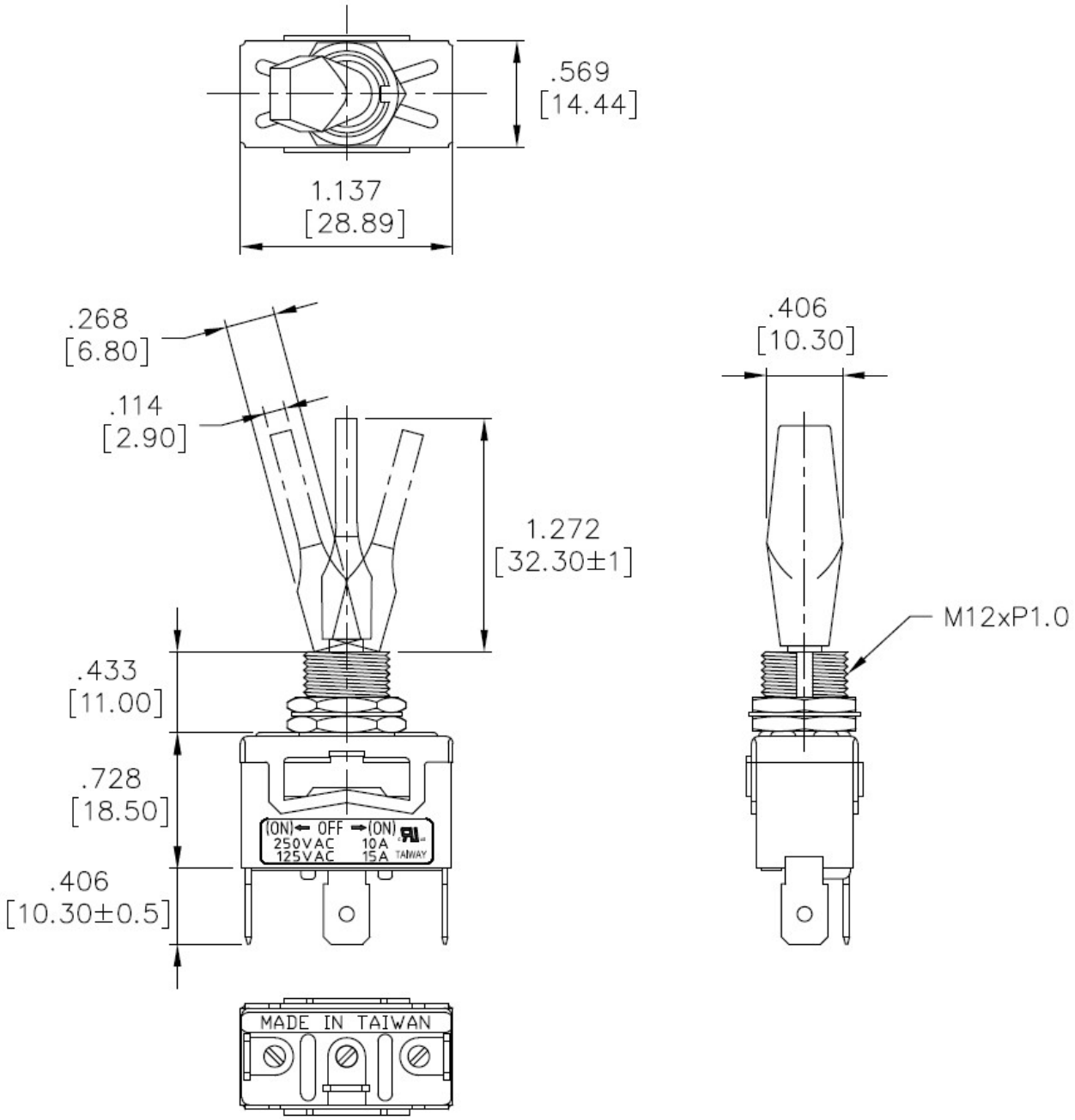

Schematic:

Stock No. 2067007

Drawing:

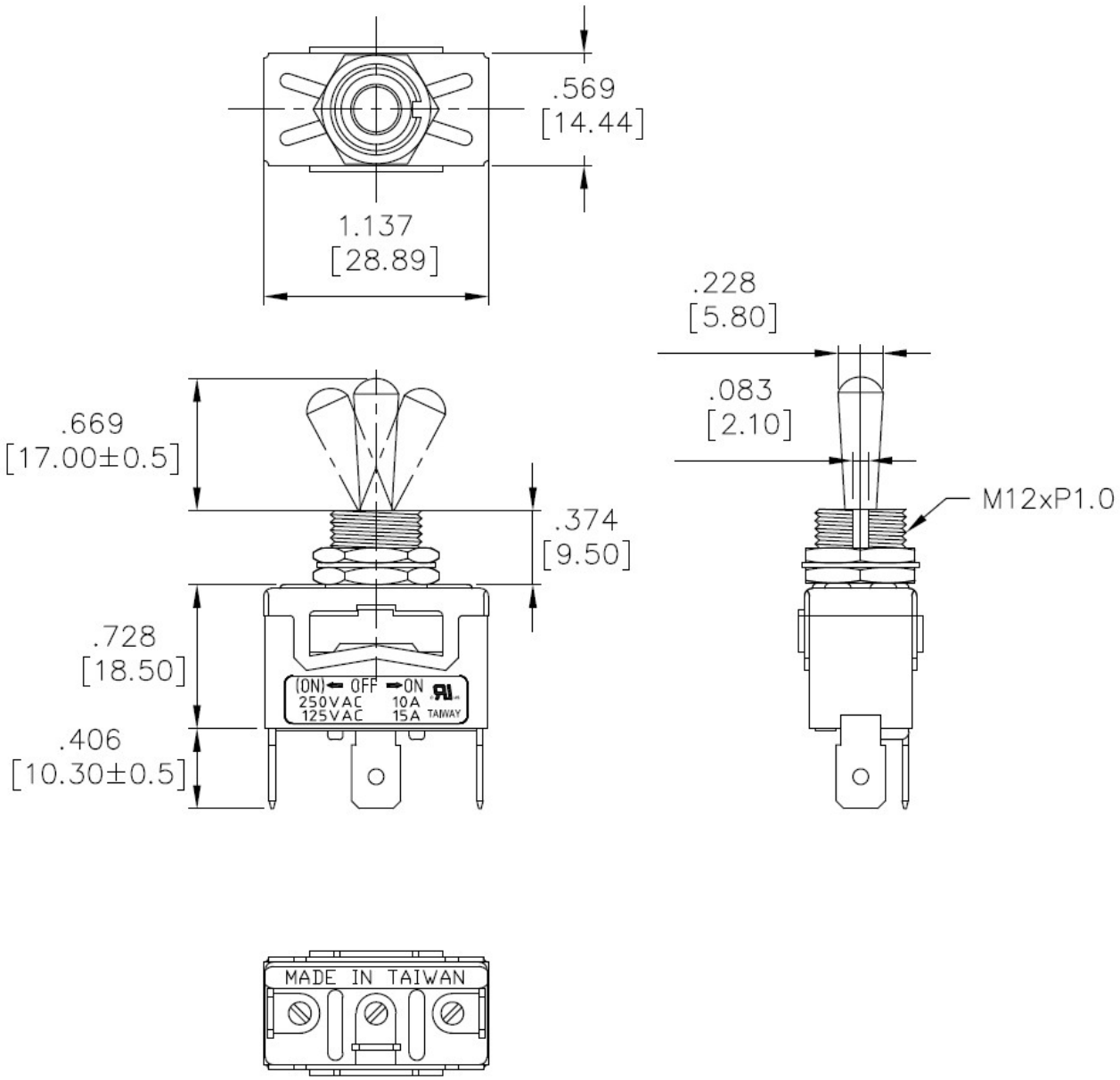

Schematic:

Stock No. 2066998

Drawing:

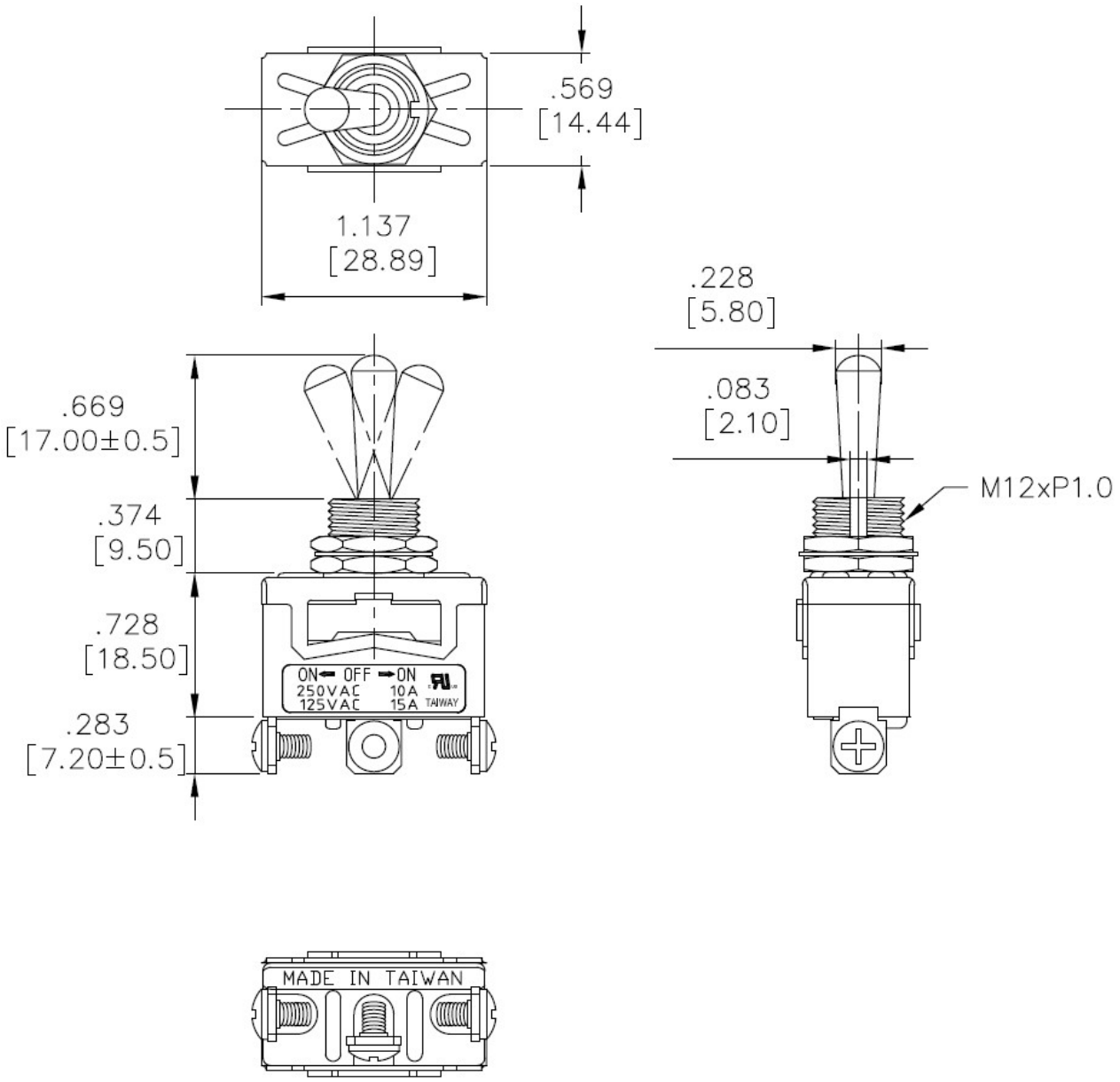

Schematic:

Stock No. 2066999

Drawing:

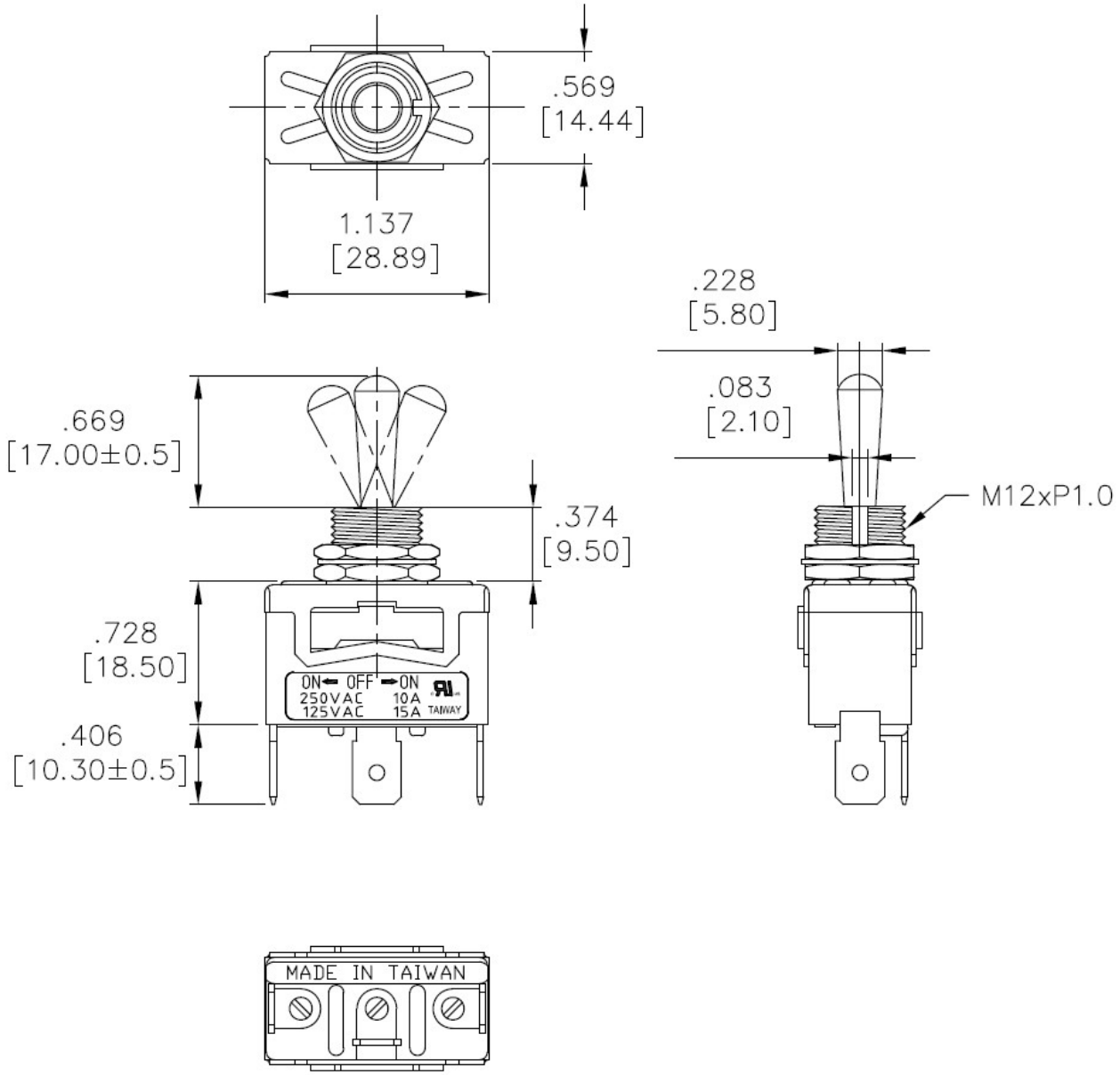

Schematic:

Stock No. 2067000

Drawing:

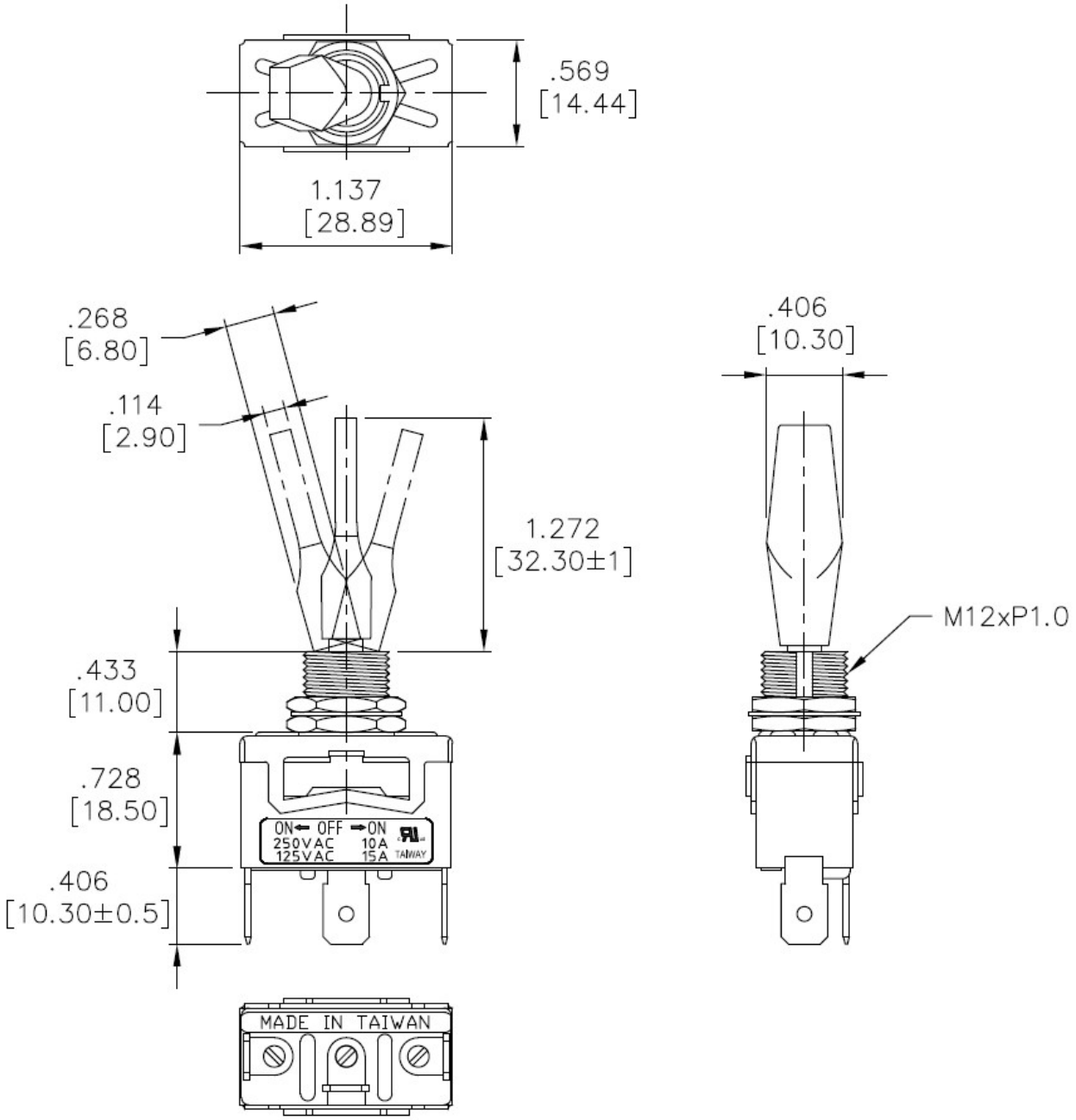

Schematic:

Stock No. 2066992

Drawing:

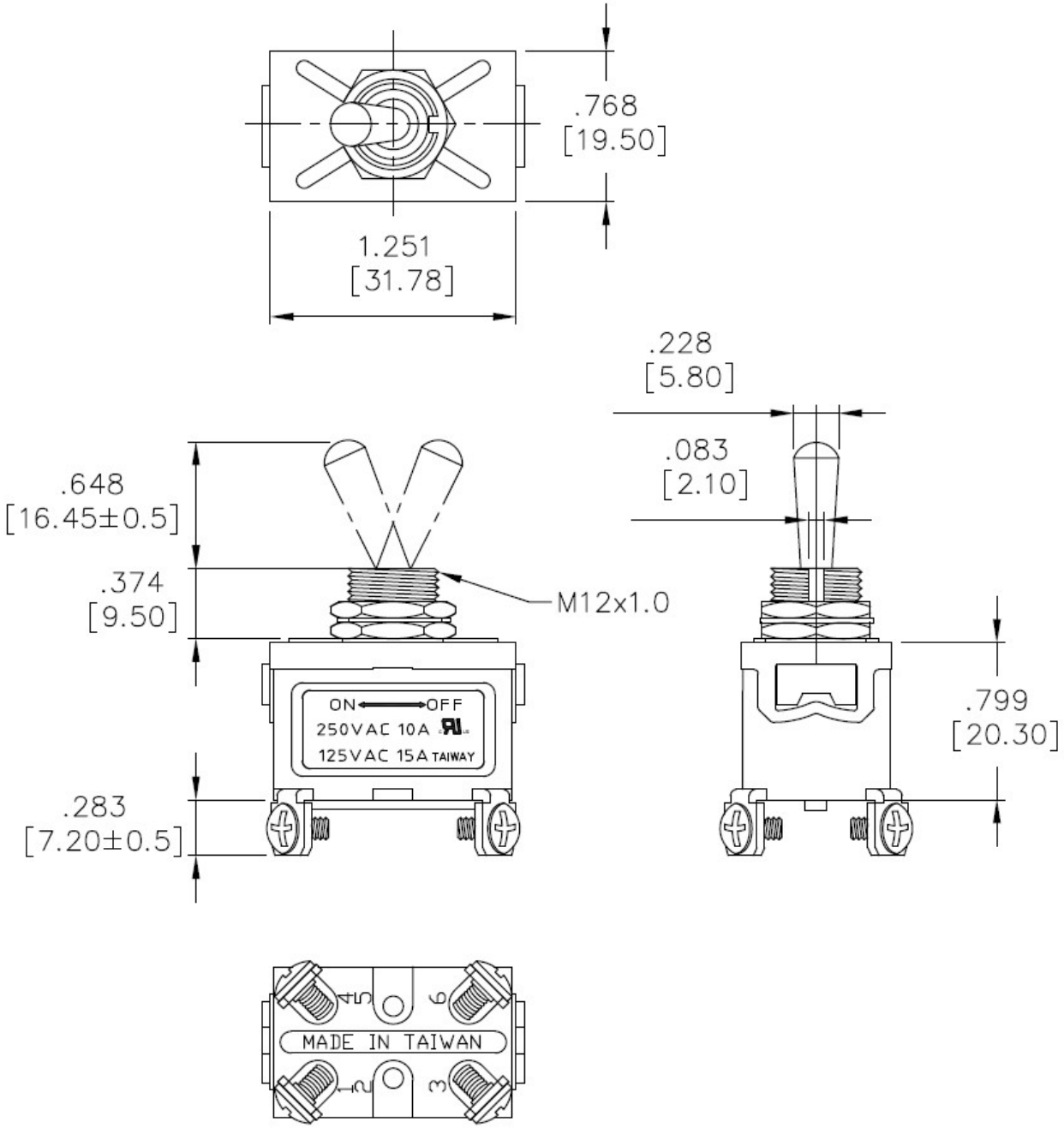

Schematic:

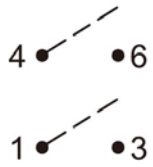

Stock No. 2066993

Drawing:

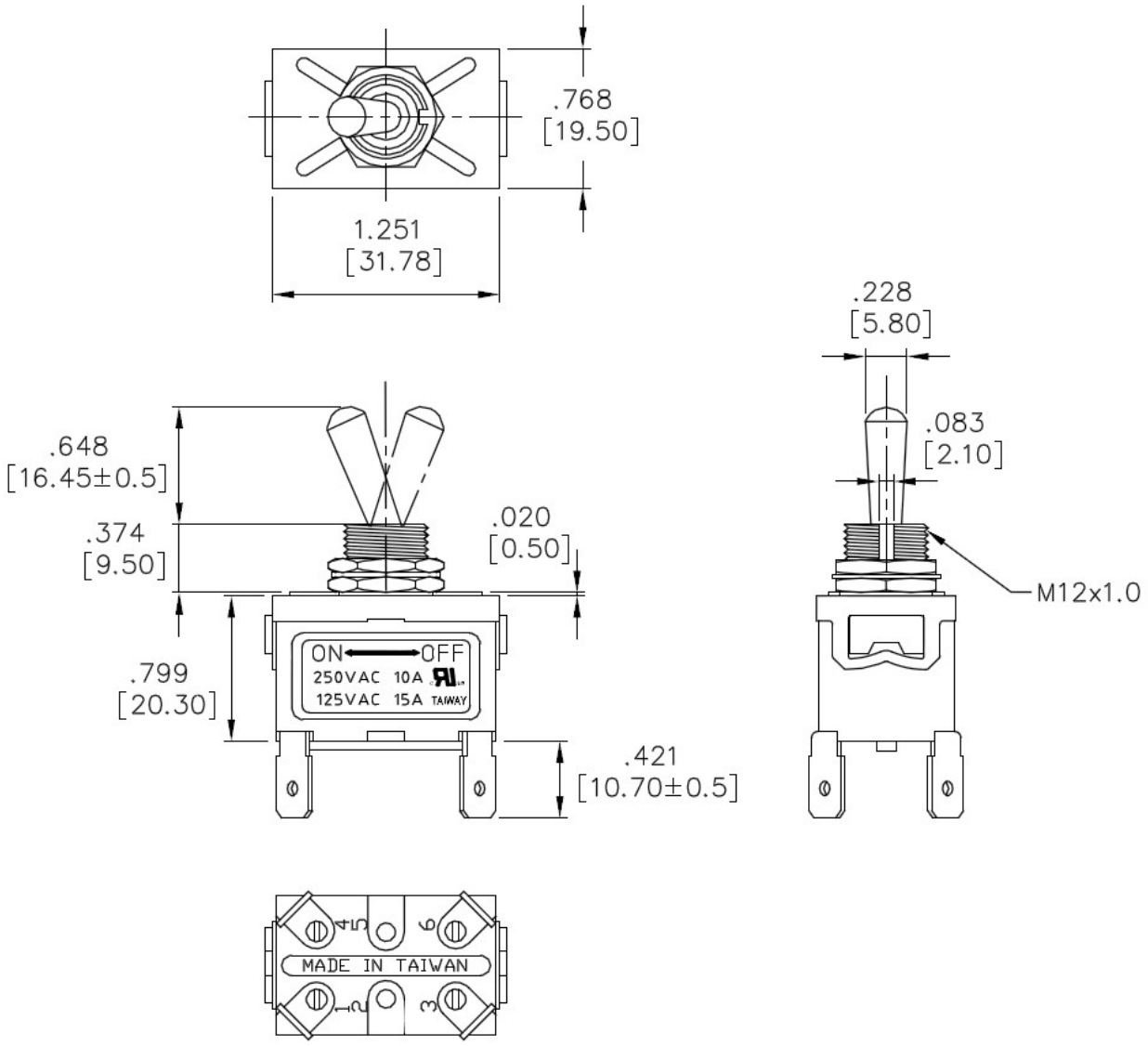

Schematic:

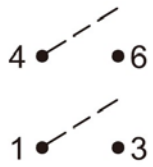

Stock No. 2066988

Drawing:

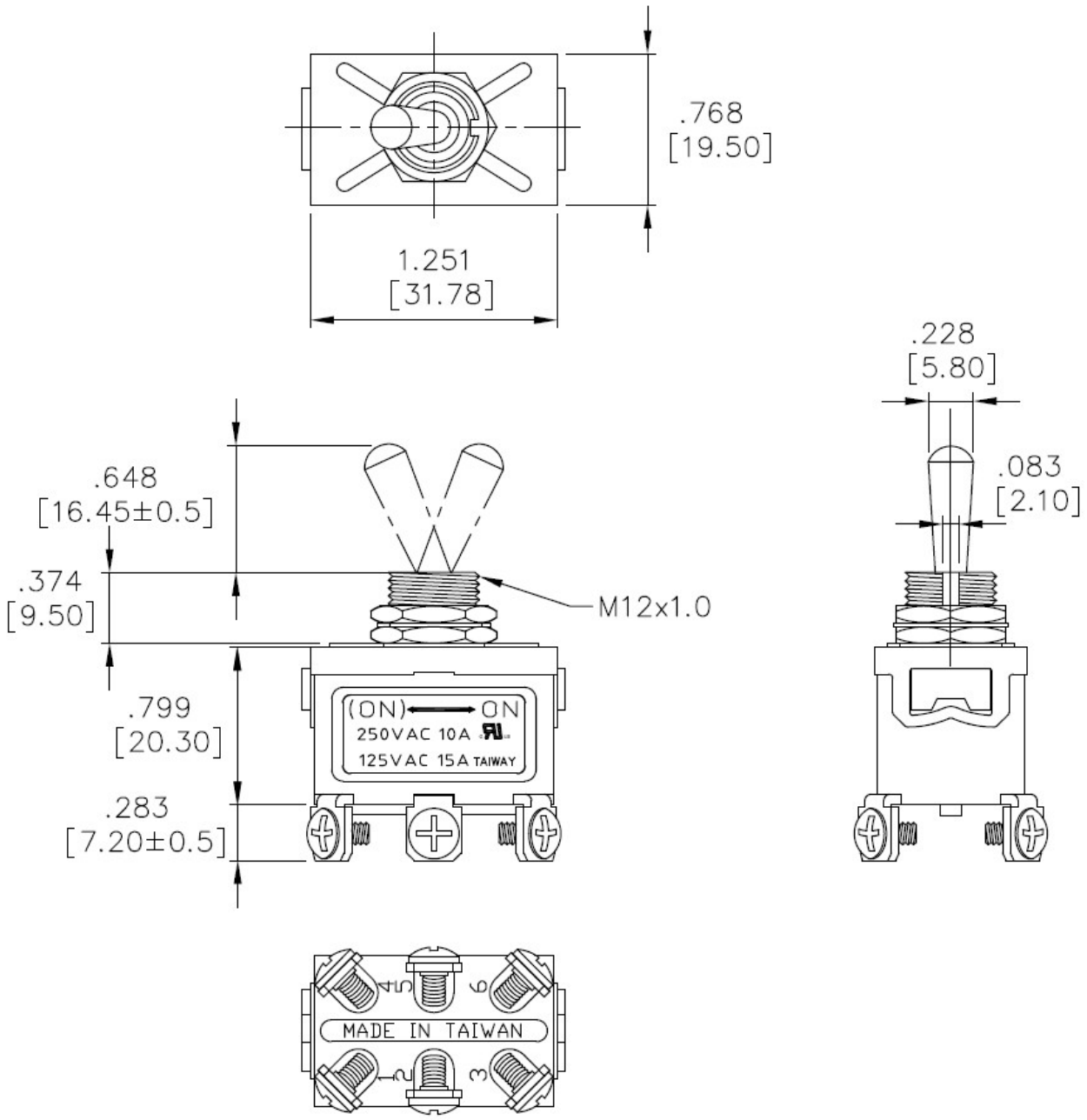

Schematic:

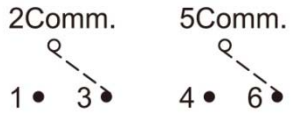

Stock No. 2066990

Drawing:

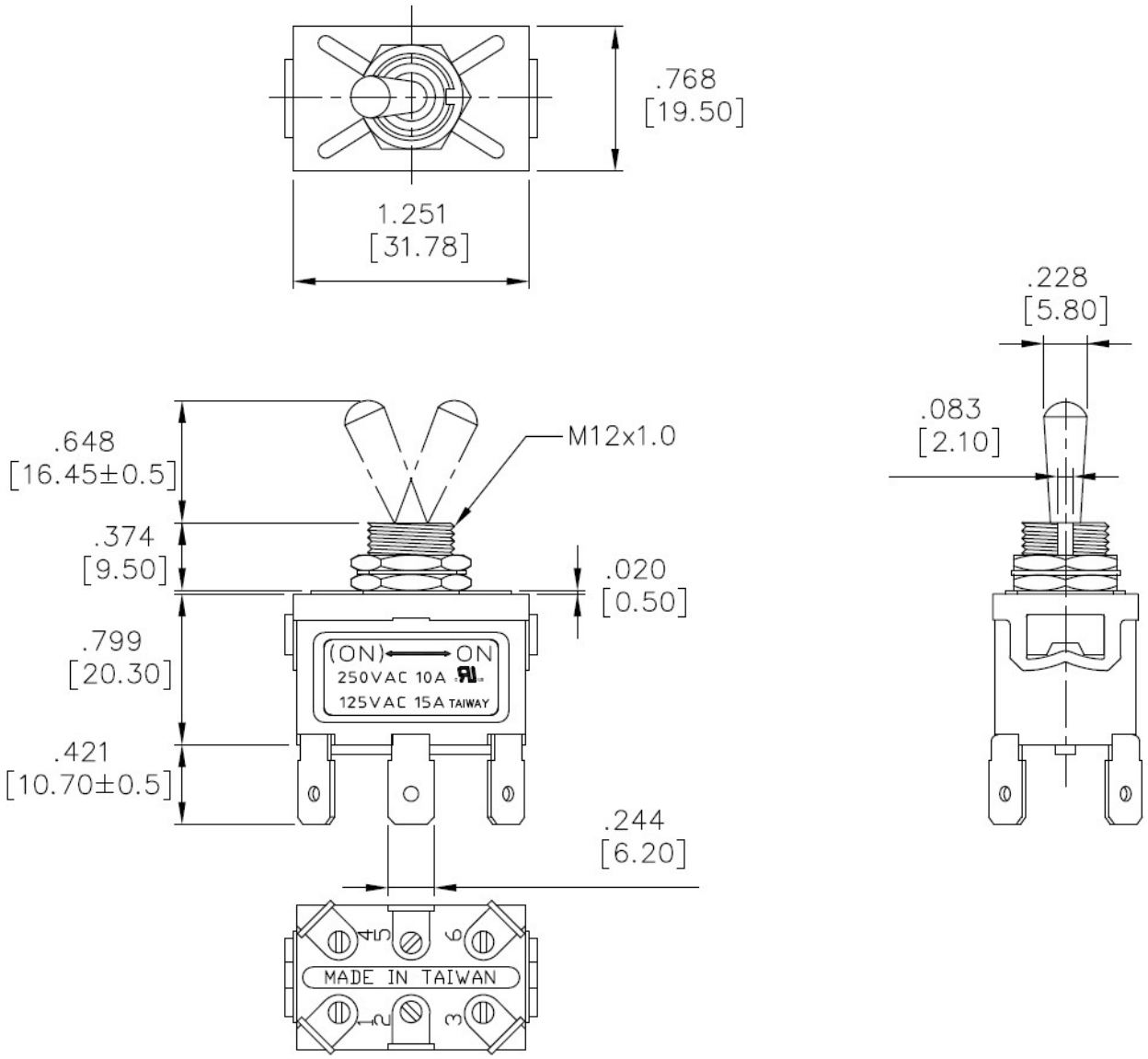

Schematic:

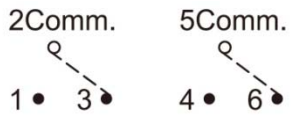

Stock No. 2066982

Drawing:

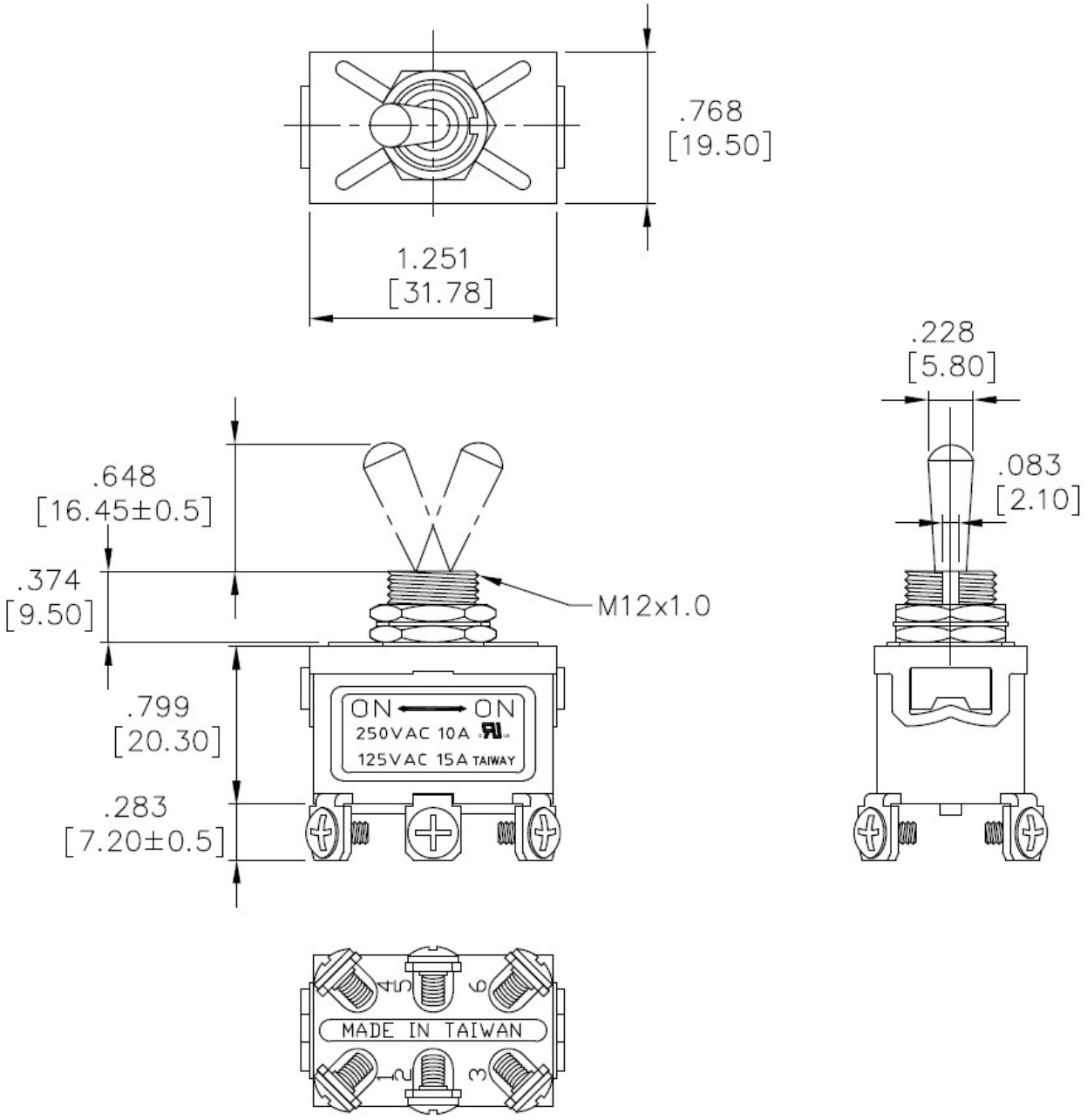

Schematic:

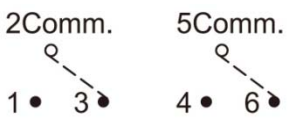

Stock No. 2066983

Drawing:

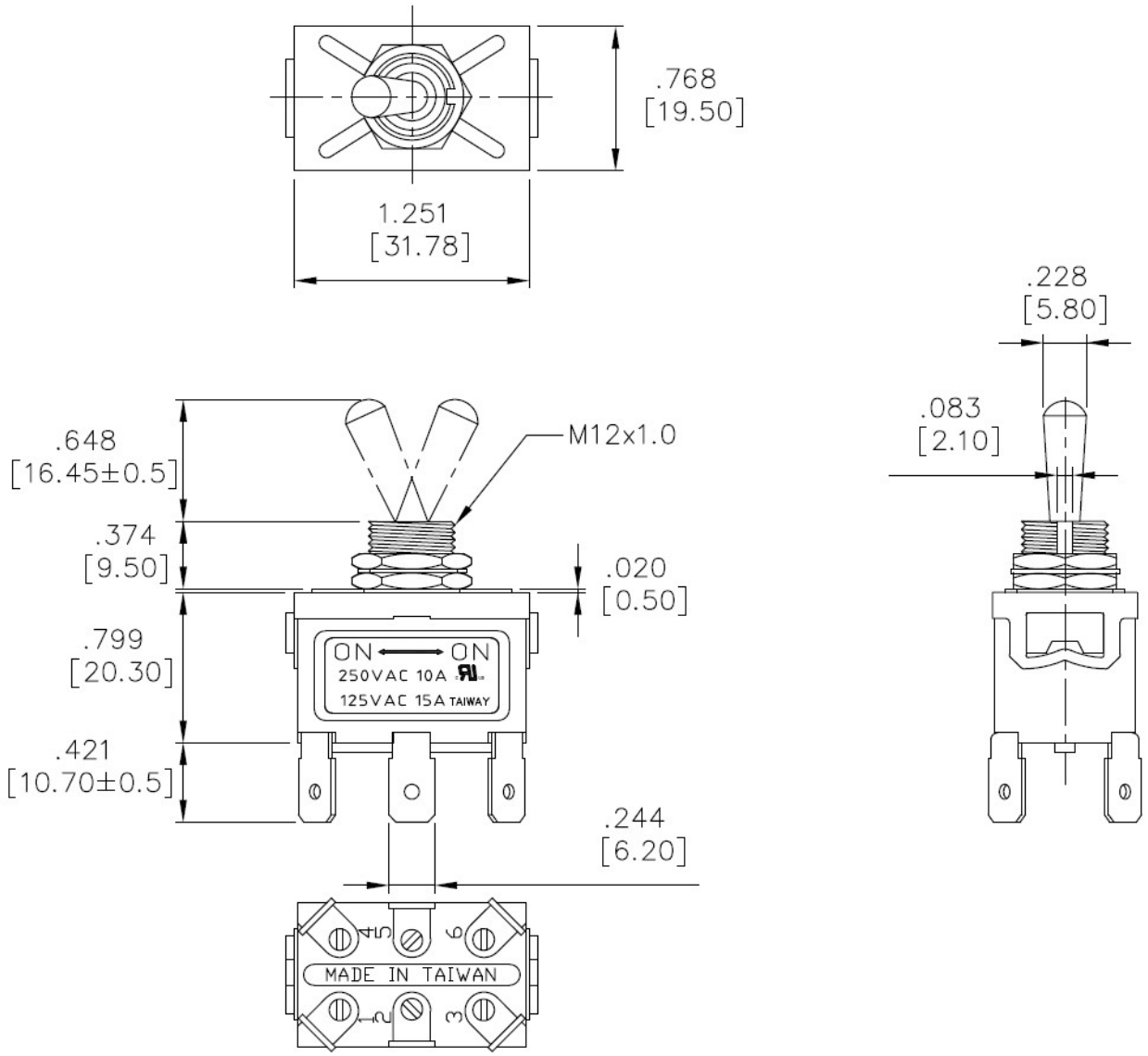

Schematic:

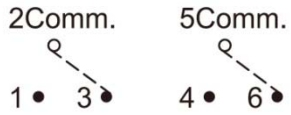

Stock No. 2066986

Drawing:

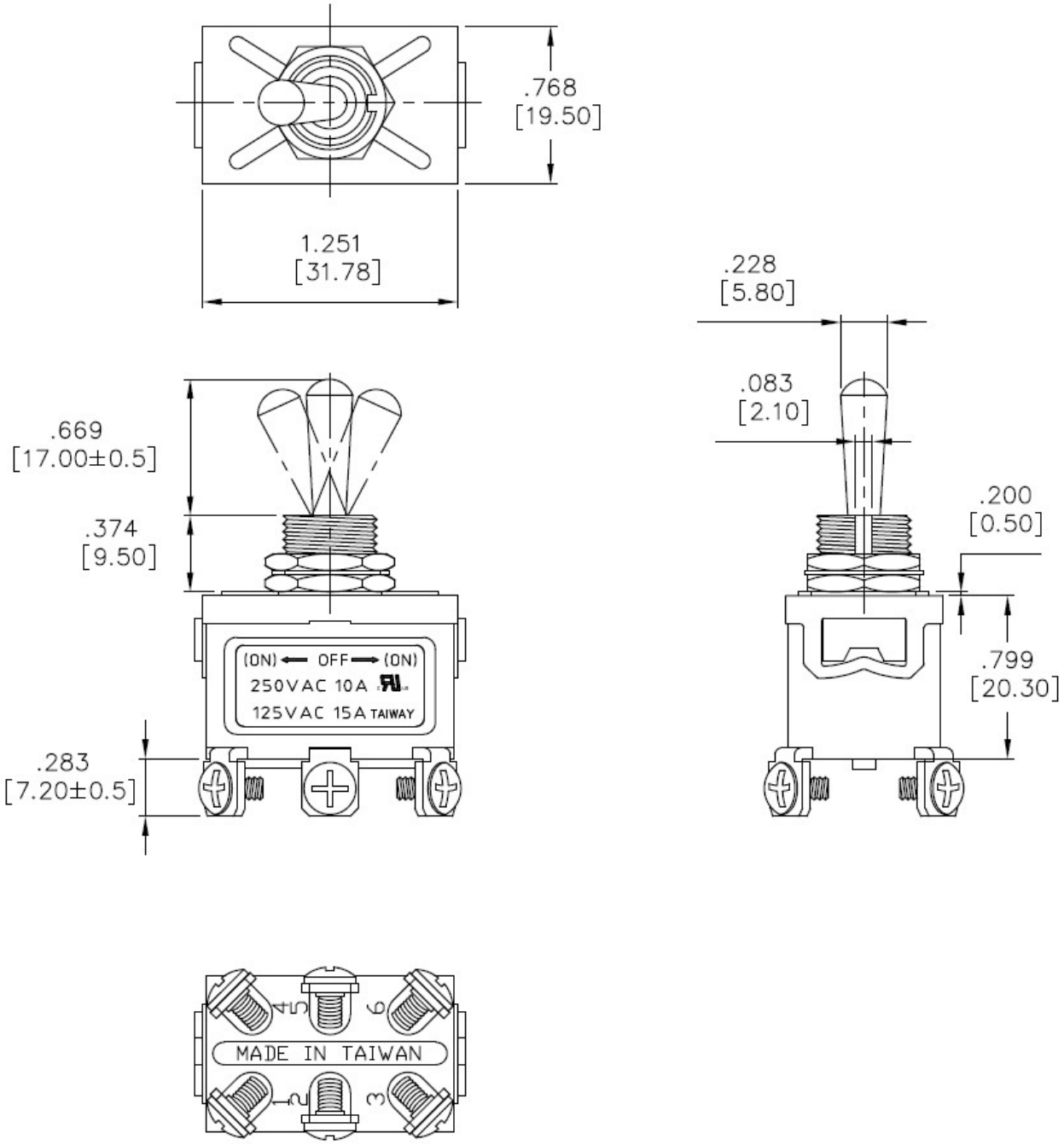

Schematic:

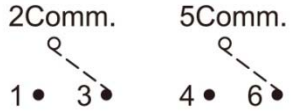

Stock No. 2066987

Drawing:

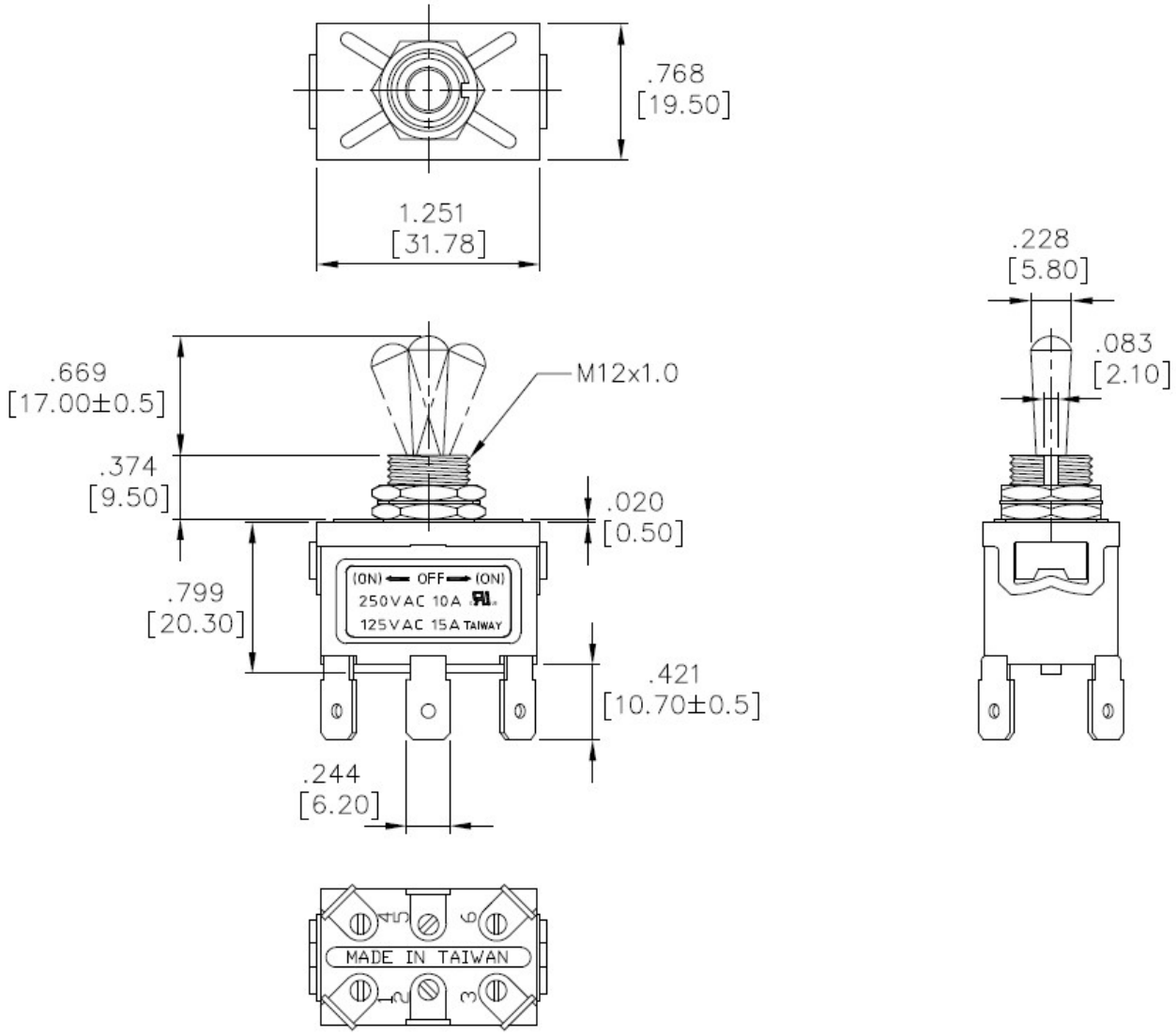

Schematic:

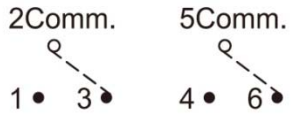

Stock No. 2066991

Drawing:

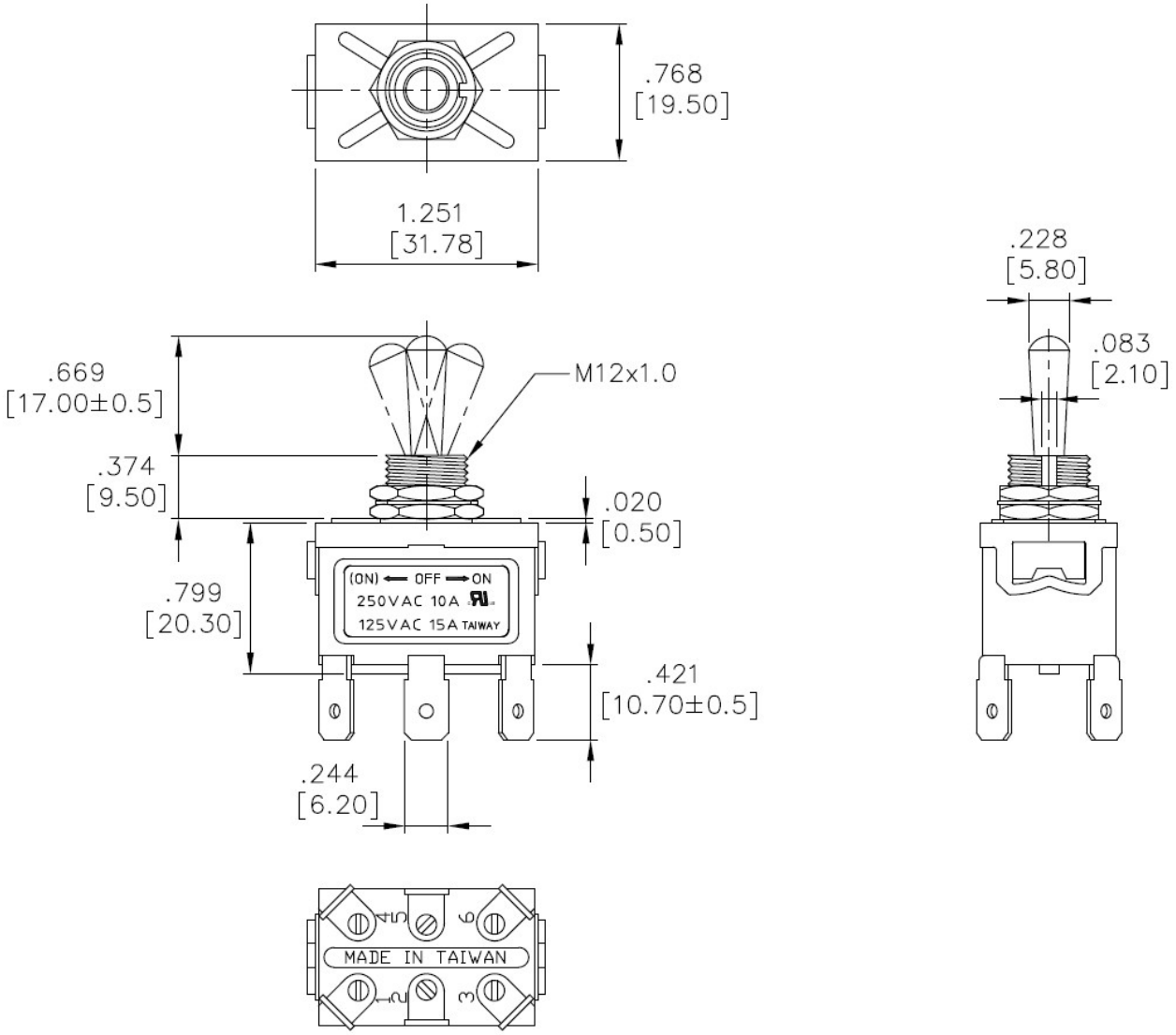

Schematic:

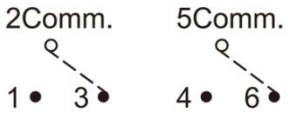

Stock No. 2066984

Drawing:

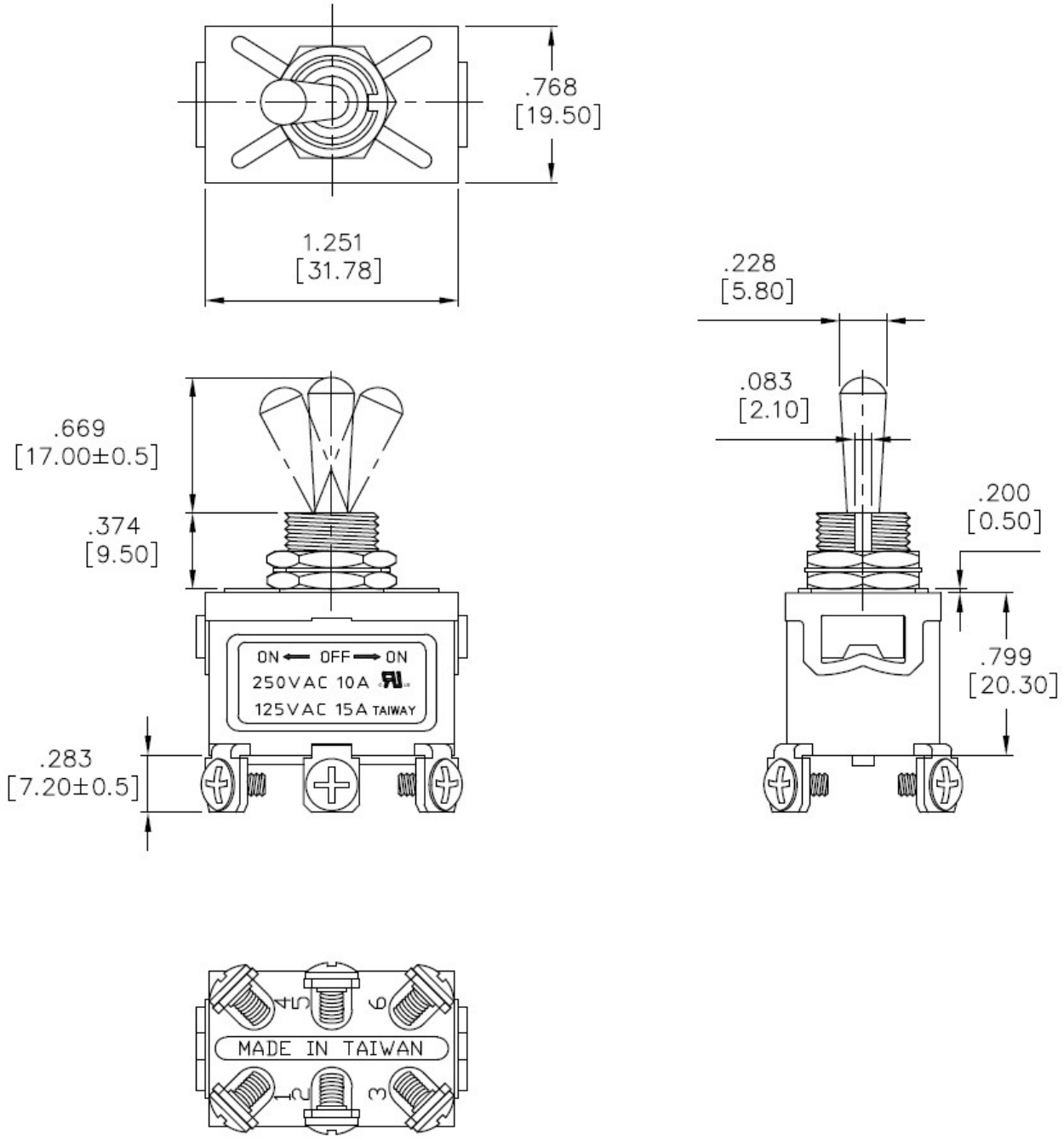

Schematic:

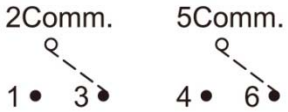

Stock No. 2066985

Drawing:

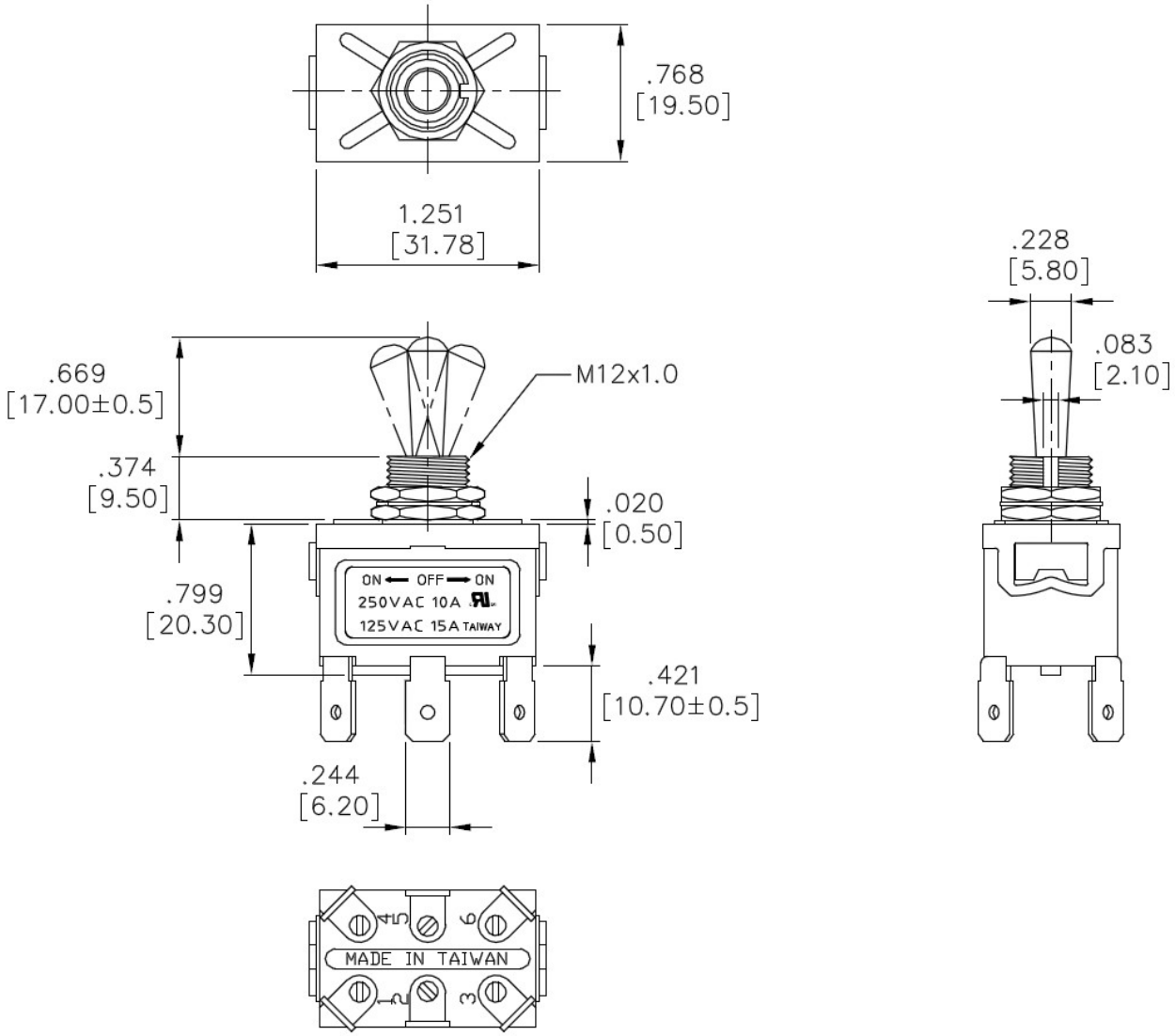

Schematic: