MICRO SWITCH
FREEPORT ILLINOIS, U.S.A
A DIVISION OF HONEYWELL
FED. MFG. CODE 91929

SWITCH-BASIC

CATALOG LISTING
BE-2RB-A2

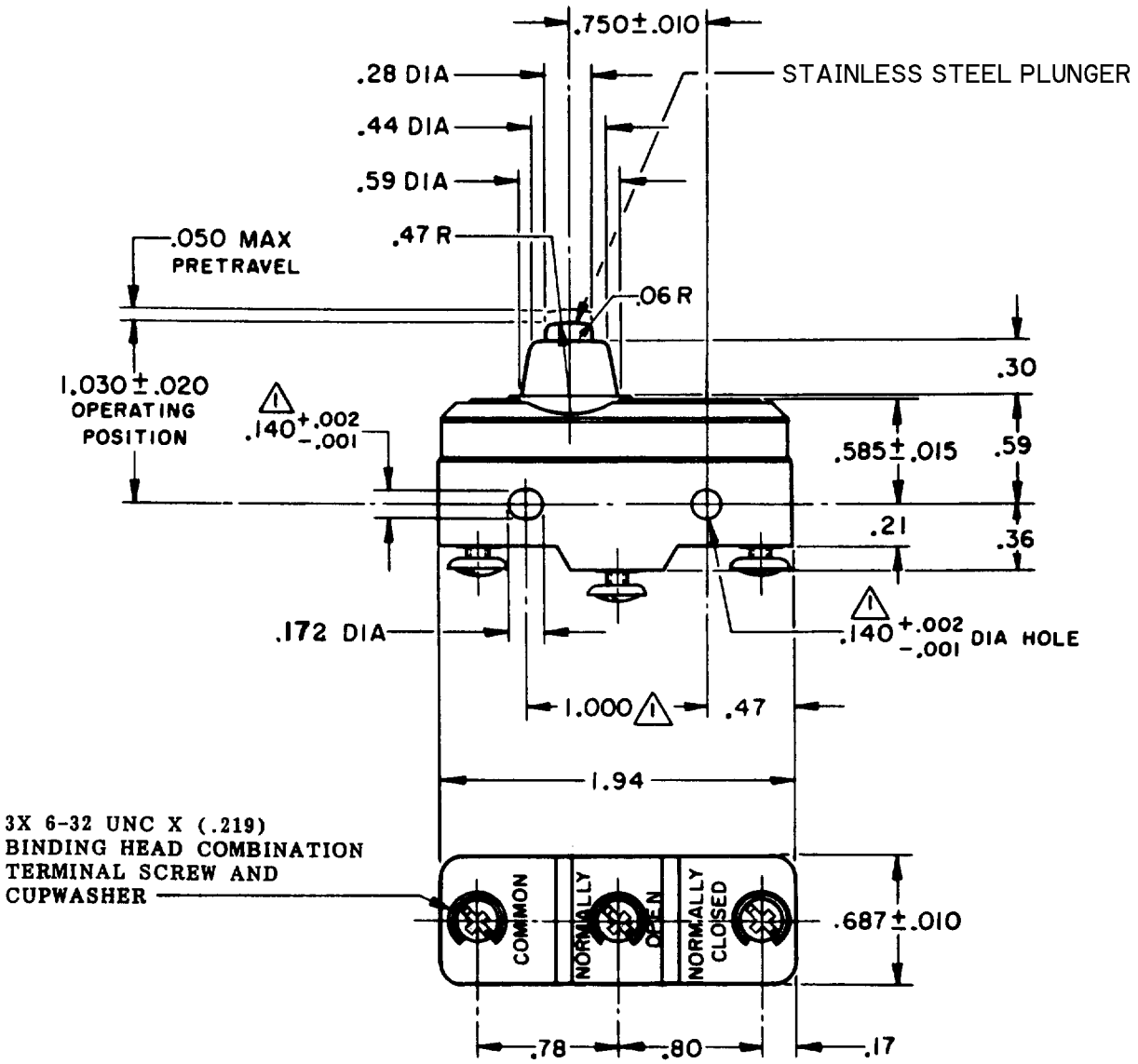

NOTE –
MOUNTING HOLES WILL ACCEPT PINS OR SCREWS OF .139 MAX DIA ON 1.000±.002 CENTERS

THIS DRAWING COVERS A PROPRIETARY ITEM AND IS THE PROPERTY OF MICRO SWITCH, A DIVISION OF HONEYWELL. THIS DRAWING IS NOT TO BE COPIED OR USED WITHOUT THE APPROVAL OF MICRO SWITCH.

CHARACTERISTICS

OPERATING FORCE ———————— 14–22 OZ
RELEASE FORCE ———————— 10 OZ MIN
DIFFERENTIAL TRAVEL ———— .0020–.0075
OVERTRAVEL ———————— .094 MIN

ELECTRICAL DATA

CONTACT ARRANGEMENT
S P D T

25A–125 or 250VAC
1HP–125VAC; 2HP–250VAC
PILOT DUTY 750VA–125, 250, 277VAC
60/75°C (Cu)

SCALE FULL
DO NOT SCALE PRINT

UNLESS OTHERWISE NOTED
DIMENSIONS ARE IN INCHES
TOLERANCES ARE:

ONE PLACE	(.0)	±.030
TWO PLACE	(.00)	±.015
THREE PLACE	(.000)	±.005
ANGLES		±

WEIGHT .064 LB

CATALOG LISTING
BE-2RB-A2
PAGE 1 OF 1
REPLACES
RELEASE NO. PR 474
M
DRAWING NUMBER
ISSUE 7
CHECK

REVISIONS

A	C030432	RER 17 MAY 72	11 JAN 69
B	C034450	BEN 4 DEC 74	
C	CO 58782	WJM 24 JAN 86	GCH
D	CO-73287-J	JAL 22 NOV 93	
E	CO 77590	SAD 9 JUN 94	
F	CO-95750-B	CSL 29 MAR 00	11 JAN 69

LSD CHECK
8 JAN 69 DRAWN
G F S
FORMTEK
FQ-50378-1A