Safety Certificates	
KC-002:	N13395 KR5
KC-003:	N13395

RoHS Compliant

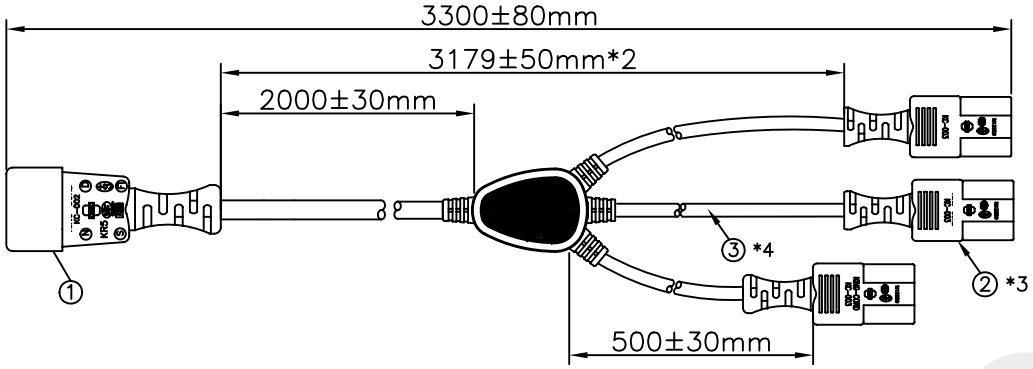

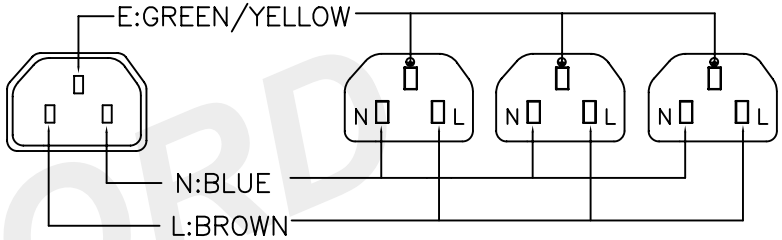

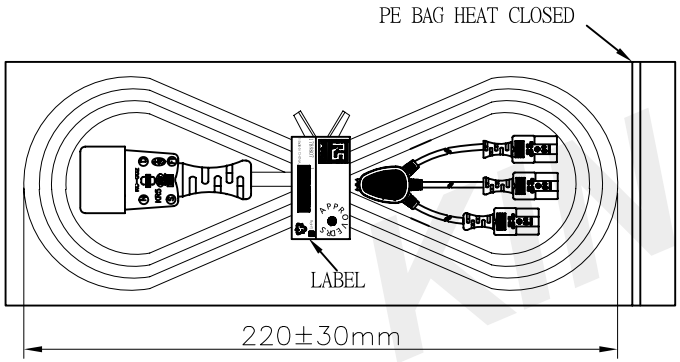

REFERENCE

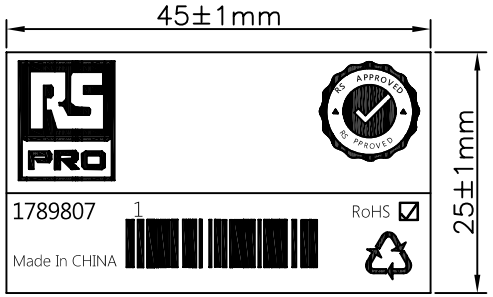

LABEL

RECORD OF CHANGE

DATE	REV	DESCRIPTION OF CHANGE
MAY.08.2018	A	NEW PRODUCT
JUN.15.2018	B	1.ADD THE CONTENT OF THE LABEL.
		2.DELETE THE WIRE LABEL.
SEP.27.2018	C	1.CHANGE CUSTOMER NUMBER 731-6208 TO 1789807.
		2.CHANGE LABEL CONTENT.

NO:	DESCRIPTION	Q'TY	REMARK
1	Plug:KC-002,10A 250V~	1PC	BLACK
2	Connector:KC-003,10A 250V~	3PC	BLACK
3	Cable:H05VV-F 3G 1.0mm²	4PC	BLACK

UNIT:mm

NOTES:

CUSTOMER NAME: FIRST CONNECTIVITY LIMITED

CUSTOMER NO.: 1789807

KING-CORD