i-LOK SERIES

Double Ferrule Tube Fittings



01 MATERIALS / SIZE RANGE

MATERIAL OPTIONS

Stainless Steel 316/316L
Brass / Carbon Steel
Special Alloys / Duplex / Super Duplex
Titanium / Aluminum / PTFE

METRIC TUBE O.D.
2 - 50 mm

FRACTIONAL TUBE O.D.
1/16 - 2 in.

02 APPLICATION / OPERATION

- For gas, liquid and steam systems.
- Applications include high pressure, heavy vibration, thermal stress and extreme impulse.
- Metric and fractional tube fittings are visually distinguishable.
- Follow the i-LOK installation instructions for assembly and reassembly.

PRODUCT SELECTION
Select the fitting material, tube size and end connection to suit the application.

03 CONNECTION / CONFIGURATION OPTIONS

Item	Options
Construction	Body, nut, front ferrule and back ferrule
Tube connections	Fractional and metric tube sizes
End connections	Tube, NPT / PT / BSPP, SAE, AN, flange and weld ends
Materials	Stainless steel, brass and other options; see material designators

04 CONTENTS

01 TECHNICAL INFORMATION 3

02 TUBE TO TUBE FITTINGS 15

IU	Union	15
IUR	Reducing Union	16
IL	Elbow	18
ILR	Reducing Elbow	19
IT	Union Tee	20
ITR	Reducing Tee	21
IX	Union Cross	23
IBU	Bulkhead Union	24

03 TUBE TO THREAD FITTINGS 25

IMC-N	Male Connector NPT Thread	25
IMC-R	Male Connector PT Thread	26
IMC-G	Male Connector For Bonded Washer DIN 3852 Form A	27
IMC-GB	Male Connector For Metal Gasket Seal DIN 3852 Form B	28
IMCB-N	Bulkhead Male Connector	29
ILM-N	Male Elbow	30
ILM-R	Male Elbow	31
ITRM-N	Male Run Tee	32
ITRM-R	Male Run Tee	33
ITBM-N	Male Branch Tee	34
ITBM-R	Male Branch Tee	35
ICF-N	Female Connector	36
ICF-R	Female Connector	37
IGC-G	Female Gauge Connector	38
ICBF-N	Bulkhead Female Connector	39
ILF-N	Female Elbow	40
ITRF-N	Female Run Tee	41
ITBF-N	Female Branch Tee	42

04 STUB TUBE CONNECTORS 43

IR	Port Reducer	43
ILA	Adjustable Elbow	46
ITRA	Adjustable Run Tee	47
ITBA	Adjustable Branch Tee	48
IAM-N	Male Tube Adaptor	49
IAM-G	Male ISO Parallel Tube Adaptor	50
IAF-N	Female Tube Adaptor	51
IAM-U	Male SAE Tube Adaptor	52
ICP	Port Connector	53

05 FLANGE & SAE CONNECTORS 54

IFTC	Lapped Flange Connector	54
IFTC	Integral ANSI Flange Connector	55
IUA	AN Union	56
IMC-U	Non-Positionable SAE Male Connector	57
IMC-UO	O-Seal SAE Male Connector	58
ILBS-UP	Positionable 45° SAE Male Elbow	59
ILS-UP	Positionable SAE Male Elbow	60
ITBS-UP	Positionable SAE Male Branch Tee	61

06 TUBE TO WELD END FITTINGS 62

ICSW	Tube Socket Weld Connector	62
ILSW	Tube Socket Weld Elbow	62
ICBW	Pipe Butt Weld Connector	63
ILW	Pipe Butt Weld Elbow	64
IBUW	Bulkhead Union	64

07 PLUG & CAP 65

IC	Cap For Tube End	65
IP	Port Plug	66
II	Insert	66

08 SPARE PARTS 67

IFF	Front Ferrule	67
IFB	Back Ferrule	67
IN	Nut	67
IFS	Ferrule Set	68
IFSN	Nut + Ferrule Set	68

09 INSTALLATION INSTRUCTIONS 69

ILLUSTRATED PRODUCT INDEX 11-14

Product illustrations and all connection types

05 PERFORMANCE / DESIGN

i-LOK Tube Fittings provide outstanding leak-tight performance in gas, liquid and steam service under high pressure, heavy vibration, thermal stress and extreme impulse.

- Ferrules are engineered to grip and seal tubing up to the maximum recommended tubing hardness.
- The back ferrule is selectively hardened at its leading edge only, providing the elasticity needed to drive the front ferrule into full metal-to-metal contact.
- Excellent make-and-remake performance through an optimized combination of mechanical properties.
- Gas-tight sealing performance.
- 4:1 design factor (burst pressure to working pressure).
- Heat code traceability.

06 APPLICATION / OPERATION

HIGH PRESSURE GAS APPLICATION

Fluid systems are pressurized to create flow. Gases in particular are often highly compressed to fill smaller tanks or containers. Pressure over 500 psig (34.5 bar) is considered high pressure. i-LOK Tube Fittings provide gas-tight performance up to the working pressure of the selected tubing.

TUBING FOR GAS APPLICATION

Use heavier-wall tubing for gas service. Recommended heavier-wall sizes are shown in the unshaded areas of the tubing tables beginning on page 6. Thin-wall sizes are shaded; heavier-wall sizes are unshaded. Gases such as air, oxygen, helium, nitrogen, methane and propane have very small molecules that can escape through even the smallest leak path. Heavier-wall tubing lets the ferrules coin out minor surface defects, whereas thin-wall tubing offers less resistance to the ferrules and is less likely to have surface defects coined out. Treat any tubing surface defect as a potential leak path.

VACUUM APPLICATION

The i-LOK sealing system prevents air ingress into the tubing system under vacuum. With properly selected tubing, i-LOK Tube Fittings remain leak-tight at vacuum levels down to 10^{-9} torr.

CRYOGENIC APPLICATION

Temperatures below -100°F (-73°C) are considered cryogenic. Stainless steel i-LOK Tube Fittings provide leak-tight performance down to -328°F (-200°C).

MAKE AND REMAKE

The mechanical properties of i-LOK Tube Fittings provide excellent make-and-remake performance.

LEAK-FREE

Following the i-LOK installation instructions ensures a leak-free tubing system.

07 METRIC / FRACTIONAL IDENTIFICATION

Metric and fractional tube fittings are designed to be visually distinguishable.



Metric Size



Fractional Size

i-LOK metric tube fittings are identified by a stepped shoulder on the nut and body. Metric nuts and straight bodies are machined from hex bar stock; forged shapes (tees, elbows and crosses) also have the stepped shoulder on the body.

08 CLEANING / SURFACE PROTECTION

Tube fittings are cleaned to remove surface contamination, loose particles, machining chips and cutting oil. Additional processing is applied to protect the fittings from corrosion and improve performance. Special cleaning to ASTM G93 Level C is available on request.

Fitting body materials	Additional processing
Stainless Steel, 6Mo	Passivation
Carbon Steel	White zinc electroplating (hexavalent chromium-free)
Brass	Acid Cleaning
Alloy 20, Monel 400, Alloy 600, Alloy 625, Alloy 825, C276, Duplex, Super Duplex	Anodizing
Titanium Gr.4	Hydrocarbon Film
Aluminum	Anodizing, Hydrocarbon Film
PTFE	Cleaning

09 TUBING SELECTION / PREPARATION

Buying high-quality tubing, storing it properly in racks and handling it with care are the keys to a leak-tight tubing system.

TUBING SURFACE

The tube surface must be free of defects such as scratches, draw marks and flat spots.

TUBING HARDNESS

Tubing must be fully annealed and suitable for bending and flaring.

OVAL

Out-of-round tubing may not enter the fitting.

WELDED TUBING

Welded tubing must have no measurable weld bead on the outside diameter.

TUBING WALL THICKNESS

Tubing wall thickness determines the working pressure of the tubing. i-LOK Tube Fittings are designed for use with the tubing wall thicknesses listed in the tubing tables beginning on page 6. For gas service, use the unshaded wall thicknesses in the tubing tables. Wall thicknesses not listed in the tubing tables are not recommended for use with i-LOK Tube Fittings.

TUBE HANDLING

Handle tubing carefully to keep the surface in as-delivered condition.

- Do not drag tubing out of tubing racks.
- Do not drag tubing across rough surfaces such as concrete.

TUBE CUTTING

- Use the correct tube cutter; the wrong cutter can excessively deform the tube end.
- Do not take deep cuts with each turn of the cutter.
- Hacksaw blades should have at least 32 teeth per inch.
- Deburr both the OD and ID of the tube end before assembly.

10 THREAD STANDARDS / CONNECTION CONFIGURATIONS

The table below lists the thread designators and applicable standards for all i-LOK threaded ends.

D*: Thread designator

D*	Configuration	Standards
TAPERED PIPE THREADS		
N	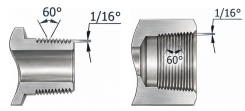	ASME B1.20.1 (NPT)
R	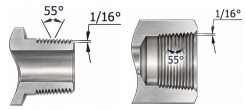	ISO 7-1 BS EN 10226 (BSPT) JIS B0203 (PF)
NO		ASME B1.20.1 SAE AS71051 SAE J514 O-Seal NPT Thread Seal by O-ring

D*	Configuration	Standards
PARALLEL PIPE THREADS		
G	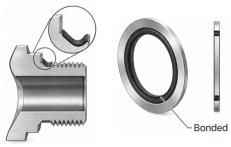	ISO 228-1 BS 2779 (BSPP) DIN 3852 (FORM A) JIS B0202 (PF) Seal by Bonded Gasket or Copper Gasket
GB	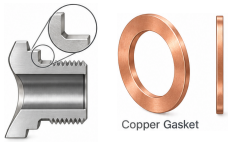	ISO 228-1 BS 2779 (BSPP) DIN 3852 (FORM B) JIS B0202 (PF) Sealed by a copper gasket compressed against the female flat face.
GO		ISO 228-1 BS 2779 (BSPP) DIN 3852 JIS B0202 (PF) Non-positionable; sealed by an O-ring in a straight thread boss

D*	Configuration	Standards
PARALLEL PIPE THREADS		
GP	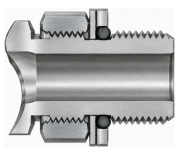	ISO 228-1 BS 2779 (BSPP) JIS B0202 (PF) Positionable Seal by O-ring
GG	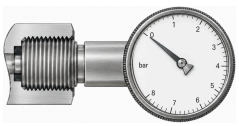	ISO 228-1, BS 2779 (BSPP) EN 837-1, EN 837-3, JIS B0202 (PF) Gauge Port Sealed by a copper gasket at the bottom of the GG female port

D*	Configuration	Standards
PARALLEL PIPE THREADS		
GR		ISO 228-1 BS 2779 (BSPP) DIN 3852 (FORM Z) JIS B0202 (PF) For G and GB male threads; sealed by a copper gasket on the female flat face
GY		ISO 228-1, BS 2779 (BSPP) DIN 3852 (FORM Y) JIS B0202 (PF) For G and GB male threads; sealed by a PTFE gasket at the bottom of the GY port.

D*	Configuration	Standards / Sealing	
SAE STRAIGHT THREADS			
UO		ASME B1.1, SAE J514 ISO R725, DIN 3852 (FORM F)	Non-Positionable Sealed by an O-ring in an SAE J1926/1 straight thread boss
UEO	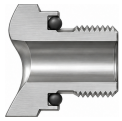	ASME B1.1 SAE J514, ISO R725	O-Seal SAE straight thread Sealed by an O-ring in an SAE J1926/1 straight thread boss
UP	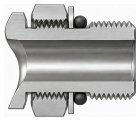	ASME B1.1 SAE J514, ISO R725	Positionable Sealed by an O-ring in an SAE J1926/1 straight thread boss

11 Pressure Ratings

i-LOK Pressure Rating

i-LOK tube ends are rated to the working pressure of the tubing listed in the tubing tables.

Threaded / Butt Weld / Socket Weld / O-ring End / AN End Pressure Rating

When a fitting has a threaded, butt weld, socket weld or O-ring end, that end may limit the pressure rating of the fitting. Unless otherwise specified, pressure ratings are based on ASME B31.3 Process Piping Code at ambient temperature.

Tapered Pipe Thread End - N, and R

Pipe Size in.	Stainless and Carbon Steel				Brass			
	Male		Female		Male		Female	
	psi	bar	psi	bar	psi	bar	psi	bar
S Value	20 ksi				10 ksi			
1/16	14,000	965	6,600	455	7,400	510	3,300	227
1/8	10,000	689	6,400	441	5,000	345	3,200	220
1/4	8,300	572	6,500	448	4,100	282	3,200	220
3/8	8,000	551	5,200	358	4,000	275	2,600	179
1/2	7,800	537	4,800	331	3,900	269	2,400	165
3/4	7,500	517	4,600	317	3,700	255	2,300	158
1	5,300	365	4,400	303	2,600	179	2,200	152
1-1/4	6,200	427	5,000	345	3,100	214	2,500	172
1-1/2	5,100	351	4,500	310	2,500	172	2,200	152
2	4,000	276	3,900	269	2,000	138	1,900	131

Parallel Pipe Thread End - G, and GB

Pipe Size in.	Stainless and Carbon Steel	
	Male	
	psi	bar
S Value	20 ksi	
1/8	16000	1103
1/4	12500	861
3/8	12000	827
1/2	11900	820
3/4	8000	551
1	5600	386
1-1/4	5400	372
1 1/2	5100	351

SAE Straight Thread End - UF, and UP

Nominal SAE Dash Size	SAE Thread Size	Stainless and Carbon Steel			
		Non-Positionable "UF"		Positionable "UP"	
		psi	bar	psi	bar
2	5/16-24	4568	315	4568	315
4	7/16-20				
6	9/16-18			3626	250
8	3/4-16				
10	7/8-14	3626	250	2900	200
12	1 1/16-12				
14	1 3/16-12	2900	200	2320	160
16	1 5/16-12				
20	1 5/8-12	2320	160	1813	125
24	1 7/8-12				
32	2 1/2-12	1813	125	1450	100

Pressure ratings are based on SAE J1926/3 at ambient temperature.

Positionable ISO/BSPP Parallel Thread - GR

ISO/BSPP Male Pipe Size in.	Stainless and Carbon Steel	
	psi	bar
1/8	4568	315
1/4		
3/8		
1/2	3626	160
3/4		
1		

Pressure ratings are at ambient temperature.

12 PRESSURE / TEMPERATURE / TUBING DATA

SAE J514 37° Flare AN End

Tube O.D.		Stainless and Carbon Steel SAE J514, Table 1.	
Metric, mm	in.	psi	bar
2	1/8	5000	344
6	1/4	5000	344
8	5/16	5000	344
10	3/8	4000	275
12	1/2	3000	206
16	5/8	3000	206
20	3/4	2500	172
25	1	2000	137
32	1-1/4	1150	79.2
38	1 1/2	1000	68.9
50	2	1000	68.9

■ Pressure ratings are taken from SAE J514.

Pipe Butt Weld End - BW

Nom. Pipe Size	Stainless and Carbon Steel Butt Weld End	
	psi	bar
S Value	20 ksi	
1/8	5300	365
1/4	5200	358
3/8	4400	303
1/2	4100	282
3/4	3200	220
1	3100	213
1-1/4	3000	206
1 1/2	2900	199
2	1900	131

■ Pressure ratings are at ambient temperature.

Tube Socket Weld End - SW Pressure Equivalents

bar	MPa	psi
1	0.1	14.5
100	10	1450
160	16	2321
210	21	3045
315	31.5	4569
350	35	5075
400	40	5801
413.68	41.36	6000

Socket weld ends are rated to the working pressure of the connected tubing.

O-Seal Fittings - "NO" and "UO" Ends

Stainless steel and carbon steel "NO" and "UO" ends up to 1 in. are rated to 3000 psig (206 bar) at ambient temperature.

Temperature Rating

For fittings with O-rings, the O-ring temperature rating may limit the temperature rating of the fitting. Brass and carbon steel fittings are supplied with 70-durometer NBR O-rings; stainless steel fittings are supplied with 90-durometer FKM O-rings.

O-ring	Designator	Temperature Rating °C (°F)
NBR	BN	-35°C to 100°C (-31°F to 212°F)
FKM	VT	-25°C to 200°C (-13°F to 392°F)
FFKM (Kalrez®)	KZ4	-30°C to 315°C (-22°F to 600°F)

Fitting and Tubing Materials

Use tubing and fittings of the same material for a leak-tight system; dissimilar materials may affect sealing integrity. The only exception is copper tubing with brass i-LOK Tube Fittings.

Table A. Fractional Seamless Stainless Steel Tubing

Fully annealed seamless stainless steel tubing ASTM A269 or A213 TP 316/316L, 304/304L or equivalent. Tubing must be free of scratches and suitable for bending and flaring. Hardness 90 HRB or less.

Tube O.D. in	Wall Thickness (in)														
	0.012	0.014	0.016	0.02	0.028	0.035	0.049	0.065	0.083	0.095	0.109	0.12	0.134	0.156	0.188
	Working Pressure (psi)														
1/16	6800	8100	9400	12000											
1/8					8500	10900									
3/16					5400	7000	10200								
1/4					4000	5100	7500	10200							
5/16						4000	5800	8000							
3/8						3300	4800	6500	8600						
1/2						2600	3700	5100	6700						
5/8							2900	4000	5200	6000					
3/4							2400	3300	4200	4900	5800	6400			
7/8							2000	2800	3600	4200	4800	5400	6100		
1								2400	3100	3600	4200	4700	5300	6200	
1-1/4									2400	2800	3300	3600	4100	4900	
1 1/2										2300	2700	3000	3400	4000	4900
2											2000	2200	2500	2900	3600

Table B. Metric Seamless Stainless Steel Tubing

Allowable working pressures are calculated using an S value of 20,000 psi (1379 bar) for ASTM A269 tubing at -20 to 100°F (-28 to 37°C) as listed in ASME B31.3 Process Piping Code and ASME B31.1 Power Piping Code.

■ Pressure calculations are made with maximum O.D. and minimum wall thickness. No allowance is made for corrosion and erosion.
Example: ASTM A 269 Type 316 Tubing, 1/2 in. OD x 0.065 in. WT. ASTM A269 standard specifies permissible OD tolerance: +/- 0.005 in. (+/- 0.13mm), permissible WT tolerance: +/- 15%. Allowable working pressure is therefore calculated with maximum OD 0.505 in. and minimum WT 0.0552 in.

■ Safety Factor 3.75 to 1, considering specified ultimate tensile strength of 75,000 psi.

Tube O.D. mm	Wall Thickness (mm)														
	0.6	0.8	1	1.2	1.5	1.8	2	2.2	2.5	2.8	3	3.5	4	4.5	5.0
	Working Pressure (bar)														
2	780	1050													
3	516	710													
4	520	660													
6		330	420	520	670										
8			310	380	490										
10			240	300	380										
12			200	240	310	380	430								
14			180	220	280	340	390	430							
15			170	200	260	320	360	400							
16				190	240	300	330	370							
18				170	210	260	290	320	370						
20				150	190	230	260	290	330	380					
22				130	170	210	230	260	300	340					
25						180	200	230	260	300	320				
28							180	200	230	260	280	330			
30							170	190	210	240	260	310			
32							160	170	200	230	240	290	330		
38								140	170	190	200	240	280	310	
42										170	180	210	250	280	
50											150	180	200	230	260

13 TUBING MATERIALS / WORKING PRESSURES

Welded Stainless Steel Tubing

ASME B31.3 requires a derating factor to be applied to the allowable working pressure of welded tubing. For single welded tubing, multiply working pressure by 0.80, and for double welded tubing, multiply working pressure by 0.85.

Table C. Fractional Seamless Carbon Steel Tubing

Soft annealed seamless cold drawn carbon steel tubing, ASTM A179 or equivalent. Tubing must be free of scratches and suitable for bending and flaring. Hardness 72 HRB or less.

Tube O.D. in	Wall Thickness (in)												
	0.028	0.035	0.049	0.065	0.083	0.095	0.109	0.12	0.134	0.148	0.165	0.18	0.22
	Working Pressure (psig)												
1/8	8000	10200											
3/16	5100	6600	9600										
1/4	3700	4800	7000	9600									
5/16		3800	5500	7600									
3/8		3100	4500	6200									
1/2		2300	3300	4500	5900								
5/8		1800	2600	3500	4600	5300							
3/4			2100	2900	3700	4300	5100						
7/8			1800	2400	3200	3700	4300						
1			1500	2100	2700	3200	3700	4100					
1-1/4				1600	2100	2500	2900	3200	3600	4000	4600	5000	
1 1/2					1800	2000	2400	2600	3000	3300	3700	4100	5100
2						1500	1700	1900	2200	2400	2700	3000	3700

Table D. Metric Seamless Carbon Steel Tubing

Tube O.D. mm	Wall Thickness (mm)												
	0.8	1	1.2	1.5	1.8	2	2.2	2.5	2.8	3	3.5	4	4.5
	Working Pressure (bar)												
3	670	830											
6	310	400	490	630									
8		290	360	460									
10		230	280	360									
12		190	230	290	360	410	450						
14		160	190	250	300	340	380						
15		150	180	230	280	320	350						
16			170	210	260	290	330	380					
18			150	190	230	260	290	330					
20			130	170	200	230	250	290	330				
22			120	150	180	210	230	260	300				
25					160	180	200	230	260	280			
28						160	180	200	230	250	290		
30						150	160	190	210	230	270		
32						140	150	170	200	210	250	290	
38							130	140	160	180	210	240	280

Allowable working pressures are calculated using an S value of 15,700 psi for ASTM A179 tubing at -20 to 100°F (-28 to 37°C) as listed in ASME B31.3 Process Piping Code.

- Safety Factor 3 to 1, considering ultimate tensile strength of 47,000 psi.
- To determine working pressure of ASME B31.1 Power Piping Code, multiply the ASME B31.3 rating by 0.85.

Table E. Fractional Seamless Copper Tubing

Soft annealed seamless copper tubing ASTM B75 or equivalent. Also soft annealed seamless copper water tube ASTM B88 Type K or L. Tubing must be free of scratches and suitable for bending and flaring. Hardness 60 HRB or less.

Tube O.D. in	Wall Thickness (in)										
	0.01	0.012	0.028	0.035	0.049	0.065	0.083	0.095	0.109	0.12	0.134
	Working Pressure (psig)										
1/8			2700	3600							
3/16			1800	2300	3400						
1/4			1300	1600	2500	3500					
5/16				1300	1900	2700					
3/8				1000	1600	2200					
1/2				800	1100	1600	2100				
5/8					900	1200	1600	1900			
3/4					700	1000	1300	1500	1800		
7/8					600	800	1100	1300	1500		
1					500	700	900	1100	1300	1500	
1 1/8						600	800	1000	1100	1300	1400

Table F. Metric Seamless Copper Tubing

Tube O.D. mm	Wall Thickness (mm)											
	0.7	0.8	1.0	1.2	1.5	1.6	1.8	2.0	2.2	2.5	2.8	3.0
	Working Pressure (bar)											
3	220	250										
4	160	190	240	290								
6		120	150	190	240	260						
8		80	110	130	170	190						
10		70	80	100	130	150	170	190				
12		50	70	80	110	120	130	150				
14			60	70	90	100	110	130	140	170	190	200
16			50	60	80	80	100	110	120	140	160	180
18			40	50	70	70	80	100	110	120	140	150
22			30	40	50	60	70	80	80	100	110	120
25			30	40	50	50	60	70	70	80	100	100
28							50	60	60	70	80	90

Allowable working pressures are calculated using an S value of 6000 psi for ASTM B75 and B88 tubing at -20 to 100°F (-28 to 37°C) as listed in ASME B31.3 Process Piping Code and ASME B31.1 Power Piping Code.

- Safety Factor 5 to 1, considering ultimate tensile strength of 30,000 psi.

14 ALLOY TUBING / WORKING PRESSURES

Alloy 400 Tubing

Fully annealed seamless Alloy 400 tubing, ASTM B165 or equivalent. Tubing must be free of scratches and suitable for bending and flaring. Hardness 75 HRB or less. OD tolerance not to exceed ±0.005 in. (±0.13 mm).

Table G. Fractional Seamless Alloy 400 Tubing

Tube O.D. in	Wall Thickness (in)							
	0.028	0.035	0.049	0.065	0.083	0.095	0.109	0.12
	Working Pressure (psig)							
1/8	7900	10200						
1/4	3700	4800	7000	9600				
3/8		3100	4400	6100				
1/2		2300	3300	4400				
3/4			2200	3000	4000	4600		
1				2200	2900	3400	3900	4300

Table H. Metric Seamless Alloy 400 Tubing

Tube O.D. mm	Wall Thickness (mm)									
	0.8	1.0	1.2	1.5	1.8	2.0	2.2	2.5	2.8	3.0
	Working Pressure (bar)									
6	370	480	590	750						
8		350	430	550						
10		270	330	430						
12		220	270	350						
14		190	230	290	360					
18			170	220	270	310	340			
20				200	240	270	300	350		
25					170	210	240	270	310	330

Allowable working pressures are calculated using an S value of 18,700 psi for ASTM B165 tubing at -20 to 100°F (-28 to 37°C) as listed in ASME B31.3 and ASME B31.1.

- Safety Factor 3.7 to 1, considering ultimate tensile strength of 70,000 psi.

Alloy C276 Tubing

Fully annealed seamless Alloy C276 tubing, ASTM B622 or equivalent. Tubing must be free of scratches and suitable for bending and flaring. Hardness 100 HRB or less. OD tolerance not to exceed ±0.005 in. (±0.13 mm).

Table I. Metric Seamless Alloy C276 Tubing

Tube O.D. in	Tube Wall Thickness (in)					
	0.020	0.028	0.035	0.049	0.065	0.083
	Working Pressure (psig)					
1/8	8,200	12,000	15,300			
3/16	5,300	7,700	9,900	14,400		
1/4		5,600	7,200	10,600	14,400	
5/16			5,700	8,200	11,300	
3/8			4,700	6,700	9,200	
1/2			3,400	4,900	6,700	8,800

Table J. Metric Seamless Alloy C276 Tubing

Tube O.D. mm	Tube Wall Thickness (mm)					
	0.8	1.0	1.2	1.5	1.8	2.0
	Working Pressure (bar)					
6	450	600	760	1,000		
8		440	550	730		
10		340	430	570		
12		280	350	460	580	660

Allowable working pressures are calculated using an S value of 27,300 psi for ASTM B622 tubing at -20 to 100°F (-28 to 37°C) as listed in ASME B31.3 and ASME B31.1.

- Safety Factor 3.6 to 1, considering ultimate tensile strength of 100,000 psi.

Alloy 825 Tubing

Fully annealed seamless Alloy 825 tubing, ASTM B423 or equivalent. Tubing must be free of scratches and suitable for bending and flaring. Hardness not to exceed 201 HV.

Table K. Metric Seamless Alloy C276 Tubing

Tube O.D. in	Tube Wall Thickness (in)				
	0.028	0.035	0.049	0.065	0.083
	Working Pressure (psig)				
1/4	7,800	9,900	14,500		
3/8		6,400	9,200	12,700	
1/2		4,700	6,800	9,200	12,100

- Allowable working pressures are calculated using an S value of 38,700 psi for ASTM A789 tubing at -20 to 100°F (-28 to 37°C) as listed in ASME B31.3.
- Safety Factor is 3 to 1, considering ultimate tensile strength of 116,000 psi.

Alloy 625 Tubing

Fully annealed seamless Alloy 625 tubing, ASTM B444 Grade 2 or equivalent. Tubing must be free of scratches and suitable for bending and flaring. Hardness not to exceed 25 HRC.

Table L. Fractional Seamless Alloy 625 Tubing

Tube O.D. in	Tube Wall Thickness (in)					
	0.020	0.028	0.035	0.049	0.065	0.083
	Working Pressure (psig)					
1/8	8,400	12,200	15,600			
3/16	5,400	7,800	10,100	14,600		
1/4		5,700	7,300	10,600	14,600	
5/16			5,700	8,300	11,400	
3/8			4,700	6,800	9,300	
1/2			3,400	5,000	6,800	8,900

Table M. Fractional Seamless Alloy 625 Tubing

Tube O.D. mm	Tube Wall Thickness (mm)					
	0.8	1.0	1.2	1.5	1.8	2.0
	Working Pressure (bar)					
6	470	610	750	960		
8		440	540	700		
10		340	420	540		
12		280	350	440	540	620

Allowable working pressures are calculated using an S value of 26,700 psi for ASTM B444 Grade 2 tubing at -20 to 100°F (-28 to 37°C) as listed in ASME B31.1.

- Safety Factor 3.75 to 1, considering ultimate tensile strength of 100,000 psi.

15 ALLOY TUBING / WORKING PRESSURES

Alloy 600 Tubing

Fully annealed seamless Alloy 600 tubing, ASTM B167 or equivalent. Tubing must be free of scratches and suitable for bending and flaring. Hardness 92 HRB or less. OD tolerance not to exceed ±0.005 in. (±0.13 mm).

Table N. Fractional Seamless Alloy 600 Tubing

Tube O.D. in	Tube Wall Thickness (in)			
	0.028	0.035	0.049	0.065
	Working Pressure (psig)			
1/4	4,000	5,100	7,500	10,200
3/8		3,300	4,800	6,500
1/2		2,400	3,500	4,700

Table O. Metric Seamless Alloy 600 Tubing

Tube O.D. mm	Tube Wall Thickness (mm)			
	0.8	1.0	1.2	1.5
	Working Pressure (bar)			
6	330	430	520	370
10		240	300	380
12		200	240	310

Allowable working pressures are calculated using an S value of 20,000 psi for ASTM B167 tubing at ambient temperature as listed in ASME B31.3 and ASME B31.1.

- Safety Factor 5 to 1, considering ultimate tensile strength of 80,000 psi.

Alloy 20 Tubing

Fully annealed seamless Alloy 20 tubing ASTM B729, welded tubing ASTM B468 or equivalent. Tubing must be free of scratches and suitable for bending and flaring. Hardness 95 HRB or less. OD tolerance not to exceed ±0.005 in. (±0.13 mm).

Table P. Fractional Seamless Alloy 20 Tubing F9

Tube O.D. in	Tube Wall Thickness (in)					
	0.020	0.028	0.035	0.049	0.065	0.083
	Working Pressure (psig)					
1/8	6,800	9,900	12,700			
3/16	4,400	6,300	8,200	11,900		
1/4		4,700	5,900	8,700	11,900	
5/16			4,700	6,800	9,400	
3/8			3,800	5,500	7,600	
1/2			2,800	4,100	5,500	7,300

Table Q. Metric Seamless Alloy 20 Tubing

Tube O.D. mm	Tube Wall Thickness (mm)					
	0.8	1.0	1.2	1.5	1.8	2.0
	Working Pressure (bar)					
6	390	500	610	780		
8		360	440	570		
10		280	350	440		
12		230	280	360	450	500

Allowable working pressures are calculated using an S value of 23,300 psi for ASTM B729 tubing at ambient temperature as listed in ASME B31.3.

- To determine working pressure of ASME B31.1, multiply the ASME B31.3 rating by 0.98.
- Safety Factor 3.4 to 1, considering ultimate tensile strength of 80,000 psi.

Titanium Grade 2 Tubing

Fully annealed seamless and welded Titanium Grade 2 tubing, ASTM B338 or equivalent. Tubing to be free from scratches, and suitable for bending. OD tolerance not to exceed ±0.005 in. (±0.13 mm).

Table R. Fractional Seamless Tubing

Tube O.D. in	Tube Wall Thickness (in)			
	0.028	0.035	0.049	0.065
	Working Pressure (psig)			
1/4	3,000	3,900	5,700	7,800
3/8		2,500	3,600	5,000
1/2		1,800	2,600	3,600

Table S. Metric Seamless Tubing

Tube O.D. mm	Tube Wall Thickness (mm)			
	0.8	1.0	1.2	1.5
	Working Pressure (bar)			
6	330	430	520	670
10		240	300	380
12		200	240	310

Allowable working pressures are calculated using an S value of 14,300 psi for ASTM B338 tubing at -20 to 100°F (-28 to 37°C) as listed in ASME B31.1.

- Safety Factor 2.8 to 1, considering ultimate tensile strength of 40,000 psi.

Aluminum Seamless Tubing

High quality aluminum alloy seamless tubing, ASTM B210 Grade 6061-T6 or equivalent. Tubing to be free from scratches.

Table T. Fractional Aluminum Seamless Tubing

Tube O.D. in	Tube Wall Thickness (in)				
	0.035	0.049	0.065	0.083	0.095
	Working Pressure (psig)				
1/8	8,600				
3/16	5,600	8,000			
1/4	4,000	5,900			
5/16	3,100	4,600			
3/8	2,600	3,700			
1/2	1,900	2,700	3,700		
5/8	1,500	2,100	2,900		
3/4		1,700	2,400	3,200	
1		1,300	1,700	2,300	2,700

Table U. Metric Aluminum Seamless Tubing

Tube O.D. mm	Tube Wall Thickness (mm)						
	1.0	1.2	1.5	1.8	2.0	2.2	2.5
	Working Pressure (bar)						
6	340	420					
8	250	300					
10	190	240					
12	160	190	250	310			
14	130	160	210	260			
15	120	150	190	240			
16	120	140	180	220			
18		120	160	190	220		
20			14	170	190		
22			130	150	170	190	
25			110	130	150	170	190

Allowable working pressures are calculated using an S value of 14,000 psi for ASTM B210 Grade 6061-T6 tubing at -20 to 100°F (-28 to 37°C) as listed in ASME B31.3.

- Safety Factor 3 to 1, considering ultimate tensile strength of 42,000 psi.
- To determine working pressure of ASME B31.1 Power Piping Code, multiply the ASME B31.3 rating by 0.85.

16 TEMPERATURE FACTORS / ORDERING INFORMATION

Elevated Temperature De-rating Factors

i-LOK tube ends are rated to the working pressure of the tubing listed in the tubing tables. Working pressure decreases as temperature rises. To determine the working pressure at an elevated temperature, multiply the working pressure in Tables A through U by the factor in Table V.

Table V. Elevated Temperature De-rating Factors

ASTM Standard		A269	B75	A179	B165	B622	B423	B444	B167	A789	B729	B338	B210
Temperature		SS316	Copper	Carbon Steel	Alloy 400	C276	Alloy 825	Alloy 625	Alloy 600	Super Duplex	Alloy 20	Titanium Gr.2	Aluminum
°F	°C												
100	38	1	1	1	1	1	1	1	1	1	1	1	1
200	93	1	0.80	0.96	0.88	1	1	0.92	1	1	0.86	0.88	1
300	149	1	0.78	0.90	0.82	1	1	0.88	1	0.86	0.85	0.72	1
400	204	0.97	0.50	0.86	0.79	1	1	0.85	1	0.82	0.83	0.61	0.94
500	260	0.9	0.13	0.82	0.79	0.99	1	0.81	1	0.81	0.83	0.53	0.81
600	316	0.85		0.77	0.79	0.93	1	0.79	1	0.81	0.83	0.45	0.56
650	343	0.84		0.75	0.79	0.90	1	0.78	1		0.82		0.40
700	371	0.82		0.73	0.79	0.88	1	0.77	1		0.82		
750	399	0.81		0.68	0.78	0.86	1	0.76	1		0.82		
800	427	0.80		0.59	0.76	0.84	0.99	0.75	1		0.82		
850	454	0.79		0.50	0.59	0.83	0.98	0.74	0.98				
900	482	0.78		0.41	0.43	0.82	0.98	0.73	0.80				
950	510	0.77		0.29		0.81	0.97	0.73	0.53				
1000	538	0.77		0.16		0.80	0.96	0.72	0.35				
1050	566	0.73		0.10		0.68		0.72	0.23				
1100	593	0.62		0.06		0.55		0.72	0.15				
1150	621	0.49				0.45		0.72	0.11				
1200	649	0.37				0.36		0.72	0.10				
1250	677	0.28				0.29							

Ordering Information

Tube OD Designator

Fractional O.D.	1/16	1/8	3/16	1/4	5/16	3/8	1/2	5/8	3/4	7/8	1	1-1/4	1 1/2	2
Designator	1	2	3	4	5	6	8	10	12	14	16	20	24	32

Metric O.D. (mm)	2	3	4	6	8	10	12	16	18	22	25	32	38	50
Designator	2M	3M	4M	6M	8M	10M	12M	16M	18M	22M	25M	32M	38M	50M

Nominal Pipe Size, in.	1/16	1/8	1/4	3/8	1/2	3/4	1	1-1/4	1 1/2	2
Size Designator	1	2	4	6	8	12	16	20	24	32
N	1N	2N	4N	6N	8N	12N	16N	20N	24N	32N
R	1R	2R	4R	6R	8R	12R	16R	20R	24R	32R
G	-	2G	4G	6G	8G	12G	16G	20G	24G	32G

Material Designators

Material Grade	Designators	
	Component	Complete Assembly
Stainless Steel 316/316L	S	SA
Carbon Steel	C	CA
Brass	B	BA
6Mo	6MO	6MOA
Alloy 20	L20	L20A
Alloy 400	L400	L400A
Alloy 600	L600	L600A
Alloy 625	L625	L625A
Alloy 825	L825	L825A
Alloy C276	C276	C276A
Duplex	D	DA
Super Duplex	SD	SDA
Titanium Gr.4	TI4	TI4A
Aluminum	AL	ALA
PTFE	PE	PEA

To order, add the applicable material designator as a suffix to the part number.

- For a complete fitting assembly, use the complete-assembly designator (example: IU-8-SSA).
- For individual components, use the component designator.

Examples:
Stainless steel Nut 1/2 in. OD: IN-8-SS
Stainless steel Front Ferrule 1/2 in. OD: IFF-8-SS



- Tee part numbers list the run ends (1 and 2) first, then the branch (3).

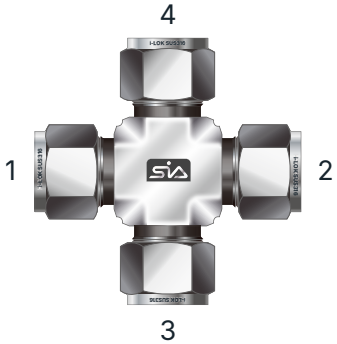

- Cross part numbers list the run ends (1 and 2) first, then the branches (3 and 4).

01 PRODUCT INDEX

TUBE TO TUBE

15 IU — Union



16 IUR — Reducing Union



18 IL — Elbow



19 ILR — Reducing Elbow



20 IT — Union Tee



21 ITR — Reducing Tee



23 IX — Union Cross



24 IBU — Bulkhead Union

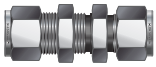

TUBE TO THREAD

25 IMC-N — Male Connector NPT Thread

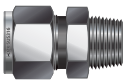

26 IMC-R — Male Connector PT Thread

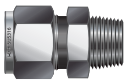

27 IMC-G — Male Connector for Bonded Washer DIN 3852 Form A



28 IMC-GB — Male Connector for Metal Gasket Seal DIN 3852 Form B

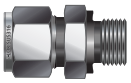

29 IMCB-N — Bulkhead Male Connector

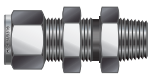

29 ILBM-N — 45° Male Elbow



30 ILM-N — Male Elbow



31 ILM-R — Male Elbow



32 ITRM-N — Male Run Tee



33 ITRM-R — Male Run Tee



34 ITBM-N — Male Branch Tee



35 ITBM-R — Male Branch Tee



36 ICF-N — Female Connector



37 ICF-R — Female Connector



38 IGC-G — Female Gauge Connector



02 PRODUCT INDEX

TUBE TO THREAD

39 ICBF-N
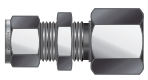
Bulkhead Female Connector

40 ILF-N

Female Elbow

41 ITRF-N

Female Run Tee

42 ITBF-N

Female Branch Tee

STUB TUBE CONNECTORS

43 IR
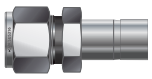
Port Reducer

45 IBR
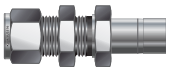
Bulkhead Reducer

46 ILA

Adjustable Elbow

47 ITRA

Adjustable Run Tee

48 ITBA

Adjustable Branch Tee

49 IAM-N
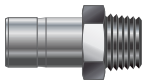
Male Tube Adaptor

50 IAM-G

Male ISO Parallel Tube Adaptor

51 IAF-N

Female Tube Adaptor

52 IAM-U
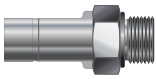
Male SAE Tube Adaptor

52 IAM-UO

Male O-SAE Tube Adaptor

52 IMAA

Male AN Adaptor

53 ICP

Port Connector

53 ICPR
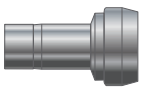
Reducing Port Connector

03 PRODUCT INDEX

FLANGE CONNECTORS

54 IFTC
Lapped Flange Connector



55 IFTC
Integral ANSI Flange Connector



AN TUBE & SAE O-RING

56 IUA
AN Union

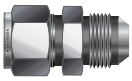

56 IUBA
AN Bulkhead Union

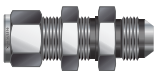

56 IAA
AN Adaptor



57 IMC-U
Non-Positionable SAE Male Connector



58 IMC-UO
O-Seal SAE Male Connector



58 IMC-NO
O-Seal NPT Male Connector

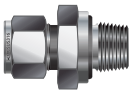

59 ILBS-UP
Positionable 45° SAE Male Elbow



59 ILM-GP
Positionable Male Elbow



60 ILS-UP
Positionable SAE Male Elbow



60 ITRS-UP
Positionable SAE Male Run Tee



61 ITBS-UP
Positionable SAE Male Branch Tee



TUBE TO WELD END

62 ICSW
Tube Socket Weld Connector



62 ILSW
Tube Socket Weld Elbow



63 ICBW
Pipe Butt Weld Connector

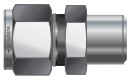

64 ILW
Pipe Butt Weld Elbow



64 IBUW
Bulkhead Union



04 PRODUCT INDEX

PLUG & CAP

65 IC
Cap for Tube End



66 IP
Port Plug



SPARE PARTS

66 II
Tube Insert



67 IFF
Front Ferrule



67 IFB
Back Ferrule



67 IN
Nut



68 IFS
Ferrule Set



68 IFSN
Nut + Ferrule Set



01 IU UNION

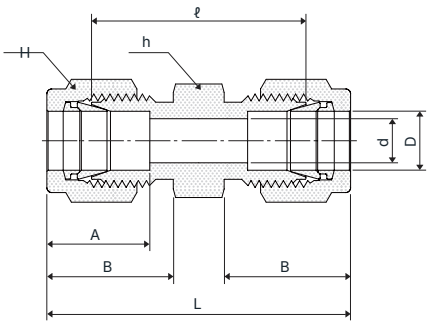

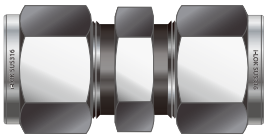

Connects Fractional Tubes

Part No.	Tube O.D. D		d min.	Width across flat				A	B	ℓ	L
				h		H					
	in	mm		in	mm	in	mm				
IU-1	1/16	1.59	1.27	5/16	7.93	5/16	7.93	8.63	10.92	17.50	25.15
IU-2	1/8	3.17	2.28	7/16	11.11	7/16	11.11	12.70	15.24	22.35	35.56
IU-3	3/16	4.76	3.04	7/16	11.11	1/2	12.70	13.71	16.00	24.13	37.33
IU-4	1/4	6.35	4.82	1/2	12.70	9/16	14.28	15.24	17.78	26.16	40.89
IU-5	5/16	7.93	6.35	9/16	14.28	5/8	15.87	16.25	18.54	28.19	42.92
IU-6	3/8	9.52	7.11	5/8	15.87	11/16	17.46	16.76	19.30	30.22	44.95
IU-8	1/2	12.70	10.41	13/16	20.64	7/8	22.22	22.86	21.84	30.98	51.30
IU-10	5/8	15.87	12.70	15/16	23.81	1	25.40	24.38	21.84	31.75	52.07
IU-12	3/4	19.05	15.74	1-1/16	26.98	1-1/8	28.58	24.38	21.84	33.27	53.59
IU-14	7/8	22.22	18.28	1-3/16	30.16	1-1/4	31.75	25.90	21.84	35.05	55.37
IU-16	1	25.40	22.35	1-3/8	34.92	1-1/2	38.10	31.24	26.41	40.38	64.77
IU-20	1-1/4	31.75	27.68	1-3/4	44.45	1-7/8	47.63	41.14	38.86	48.00	92.20
IU-24	1-1/2	38.10	34.03	2-1/8	53.97	2-1/4	57.15	50.03	45.21	53.60	107.95
IU-32	2	50.80	45.97	2-3/4	69.85	3	76.20	67.56	62.73	74.70	149.35

Connects Metric Tubes

Part No.	Tube O.D. D	d min.	Width across flat		A	B	ℓ	L
			h	H				
IU-2M	2	1.7	12	12	12.9	15.3	22.4	35.6
IU-3M	3	2.4	12	12	12.9	15.3	22.1	35.3
IU-4M	4	2.4	12	12	13.7	16.1	24.1	37.3
IU-6M	6	4.8	14	14	15.3	17.7	26.2	41.0
IU-8M	8	6.3	14	16	16.2	18.6	28.2	43.2
IU-10M	10	7.9	17	19	17.2	19.5	31.0	46.2
IU-12M	12	9.5	22	22	22.8	22.0	31.0	51.2
IU-15M	15	11.9	24	25	24.4	22.0	31.8	52.0
IU-16M	16	12.7	24	25	24.4	22.0	31.8	52.0
IU-18M	18	15.1	27	30	24.4	22.0	33.3	53.5
IU-20M	20	15.9	30	32	26.0	22.0	34.8	55.0
IU-22M	22	18.3	30	32	26.0	22.0	34.8	55.0
IU-25M	25	21.8	35	38	31.3	26.5	40.4	65.0
IU-28M	28	21.8	41	46	36.6	36.6	43.4	85.0
IU-32M	32	28.6	46	50	42.0	41.6	51.3	97.3
IU-38M	38	33.7	55	60	49.4	47.9	58.4	113.6
IU-42M	42	36.0	60	65	55.1	53.6	64.0	126.2

02 IUR REDUCING UNION

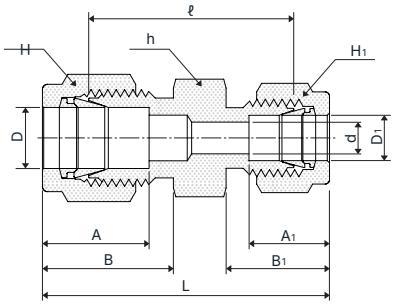

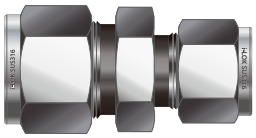

Connects Fractional Tubes

Part No.	Tube O.D.				d min.	Width across flat						A	A1	B	B1	ℓ	L
	D		D1			h		H		H1							
	in	mm	in	mm		in	mm	in	mm	in	mm						
IUR2-1	1/8	3.17	1/16	1.59	1.27	7/16	11.11	7/16	11.11	5/16	7.93	12.70	8.63	15.24	10.92	20.60	30.91
IUR3-1	3/16	4.76	1/16	1.59	1.27	7/16	11.11	1/2	12.70	5/16	7.93	13.71	8.63	16.00	10.92	21.84	32.25
IUR3-2	3/16	4.76	1/8	3.17	2.28	7/16	11.11	1/2	12.70	7/16	11.11	13.71	12.70	16.00	15.24	23.36	36.57
IUR4-1	1/4	6.35	1/16	1.59	1.27	1/2	12.70	9/16	14.28	5/16	9.73	15.24	8.63	17.78	10.92	23.11	34.29
IUR4-2	1/4	6.35	1/8	3.17	2.28	1/2	12.70	9/16	14.28	7/16	11.11	15.24	12.70	17.78	15.24	24.63	38.60
IUR4-3	1/4	6.35	3/16	4.76	3.04	1/2	12.70	9/16	14.28	1/2	12.70	15.24	13.71	17.78	16.00	25.40	39.37
IUR5-2	5/16	7.93	1/8	3.17	2.28	9/16	14.28	5/8	15.87	7/16	11.11	16.25	12.70	18.54	15.24	25.90	39.87
IUR5-4	5/16	7.93	1/4	6.35	4.82	9/16	14.28	5/8	15.87	9/16	14.28	16.25	15.24	18.54	17.78	27.43	42.16
IUR6-1	3/8	9.52	1/16	1.59	1.27	5/8	15.87	11/16	17.46	5/16	7.93	16.76	8.63	19.30	10.92	25.40	36.57
IUR6-2	3/8	9.52	1/8	3.17	2.28	5/8	15.87	11/16	17.46	7/16	11.11	16.76	12.70	19.30	15.24	26.92	40.89
IUR6-4	3/8	9.52	1/4	6.35	4.82	5/8	15.87	11/16	17.46	9/16	14.28	16.76	15.24	19.30	17.78	28.44	43.18
IUR6-5	3/8	9.52	5/16	7.93	6.35	5/8	15.87	11/16	17.46	5/8	15.87	16.76	16.25	19.30	18.54	29.46	44.19
IUR8-2	1/2	12.70	1/8	3.17	2.28	13/16	20.64	7/8	22.22	7/16	11.11	22.86	12.70	21.84	15.24	28.44	45.21
IUR8-4	1/2	12.70	1/4	6.35	4.82	13/16	20.64	7/8	22.22	9/16	14.28	22.86	15.24	21.84	17.78	29.46	46.99
IUR8-6	1/2	12.70	3/8	9.52	7.11	13/16	20.64	7/8	22.22	11/16	17.46	22.86	16.76	21.84	19.30	30.98	48.51
IUR10-6	5/8	15.87	3/8	9.52	7.11	15/16	23.81	1	25.40	11/16	17.46	24.38	16.76	21.84	19.30	31.75	49.27
IUR10-8	5/8	15.87	1/2	12.70	10.41	15/16	23.81	1	25.40	7/8	22.22	24.38	22.86	21.84	21.84	31.75	52.07
IUR12-4	3/4	19.05	1/4	6.35	4.82	1-1/16	26.98	1-1/8	28.57	9/16	14.28	24.38	15.24	21.84	17.78	31.75	49.27
IUR12-6	3/4	19.05	3/8	9.52	7.11	1-1/16	26.98	1-1/8	28.57	11/16	17.46	24.38	16.76	21.84	19.30	33.27	50.80
IUR12-8	3/4	19.05	1/2	12.70	10.41	1-1/16	26.98	1-1/8	28.57	7/8	22.22	24.38	22.86	21.84	21.84	33.27	53.59
IUR12-10	3/4	19.05	5/8	15.87	12.70	1-1/16	26.98	1-1/8	28.57	1	25.40	24.38	24.38	21.84	21.84	33.27	53.59
IUR16-8	1	25.40	1/2	12.70	10.41	1-3/8	34.92	1-1/2	38.10	7/8	22.22	31.24	22.86	26.41	21.84	40.89	63.24
IUR16-12	1	25.40	3/4	19.05	15.74	1-3/8	34.92	1-1/2	38.10	1-1/8	28.58	31.24	24.38	26.41	21.84	40.38	62.73

Connects Metric Tubes

Part No.	Tube O.D.		d min.	Width across flat			A	A1	B	B1	ℓ	L
	D	D1		h	H	H1						
IUR3M-2M	3	2	1.7	12	12	12	12.9	12.9	15.3	15.3	22.1	35.3
IUR6M-2M	6	2	1.7	14	14	12	15.3	12.9	17.7	15.3	24.6	38.6
IUR6M-3M	6	3	2.4	14	14	12	15.3	12.9	17.7	15.3	24.6	38.6
IUR6M-4M	6	4	2.4	14	14	12	15.3	13.7	17.7	16.1	25.4	39.4
IUR8M-6M	8	6	4.8	14	16	14	16.2	15.3	18.6	17.7	27.4	42.3
IUR10M-6M	10	6	4.8	17	19	14	17.2	15.3	19.5	17.7	29.5	44.5
IUR10M-8M	10	8	6.3	17	19	16	17.2	16.2	19.5	18.6	30.0	45.1
IUR12M-6M	12	6	4.8	22	22	14	22.8	15.3	22.0	17.7	29.5	47.0
IUR12M-8M	12	8	6.3	22	22	16	22.8	16.2	22.0	18.6	30.2	47.8
IUR12M-10M	12	10	7.9	22	22	19	22.8	17.2	22.0	19.5	31.0	48.7
IUR16M-10M	16	10	7.9	24	25	19	24.4	17.2	22.0	19.5	31.8	49.5

03 IUR REDUCING UNION

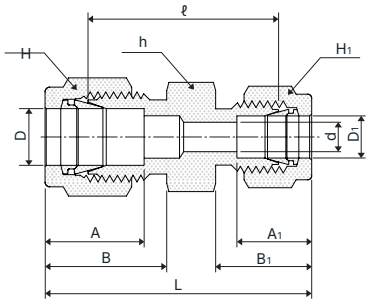

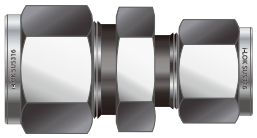

Connects Metric Tube to Fractional Tube

Part No.	Tube O.D.			d min.	Width across flat			A	A1	B	B1	ℓ	L
	D	D1			h	H	H1						
	mm	in	mm		mm	mm	mm						
IUR3M-2	3	1/8	3.17	2.3	12.0	12	11.1	12.9	12.8	15.3	15.2	22.1	35.2
IUR4M-2	4	1/8	3.17	2.3	12.0	12	11.1	13.7	12.8	16.1	15.2	23.4	36.5
IUR4M-4	4	1/4	6.35	2.4	14.0	12	14.2	13.7	15.3	16.1	17.7	25.4	39.4
IUR6M-2	6	1/8	3.17	2.3	14.0	14	11.1	15.3	12.8	17.7	15.2	24.6	38.5
IUR6M-4	6	1/4	6.35	4.8	14.0	14	14.3	15.3	15.3	17.7	17.7	26.2	41.0
IUR6M-5	6	5/16	7.93	4.8	14.3	14	15.9	15.3	16.2	17.7	18.6	27.4	42.3
IUR8M-4	8	1/4	6.35	4.8	15.0	16	14.3	16.2	15.3	18.6	17.7	27.4	42.3
IUR10M-2	10	1/8	3.17	2.3	18.0	19	11.1	17.2	12.8	19.5	15.2	27.7	41.8
IUR10M-4	10	1/4	6.35	4.8	18.0	19	14.3	17.2	15.3	19.5	17.7	29.5	44.5
IUR10M-5	10	5/16	7.93	6.3	18.0	19	15.9	17.2	16.2	19.5	18.6	30.3	45.1
IUR10M-6	10	3/8	9.52	7.1	18.0	19	17.5	17.2	16.9	19.5	19.2	31.0	45.9
IUR12M-5	12	5/16	7.93	6.3	22.0	22	15.9	22.8	16.2	22.0	18.6	30.3	47.8
IUR12M-6	12	3/8	9.52	7.1	22.0	22	17.5	22.8	16.9	22.0	19.2	31.0	48.4
IUR12M-8	12	1/2	12.70	9.5	22.0	22	22.2	22.8	22.8	22.0	22.0	31.0	51.2
IUR15M-8	15	1/2	12.70	10.4	24.0	25	22.2	24.4	22.8	22.0	22.0	31.8	52.0
IUR16M-10	16	5/8	15.87	12.7	24.0	25	25.4	24.4	24.4	22.0	22.0	31.8	52.0
IUR18M-12	18	3/4	19.05	15.1	27.0	30	28.6	24.4	24.4	22.0	22.0	33.3	53.5
IUR20M-12	20	3/4	19.05	15.7	30.0	32	28.6	26.0	24.4	22.9	22.0	34.8	54.0
IUR20M-16	20	3/4	25.4	15.9	34.9	32	38.1	26.0	31.2	22.0	26.4	38.0	60.3
IUR22M-16	22	1	25.4	18.3	34.9	32	38.1	26.0	31.2	22.0	26.4	38.2	60.3

04 IL ELBOW

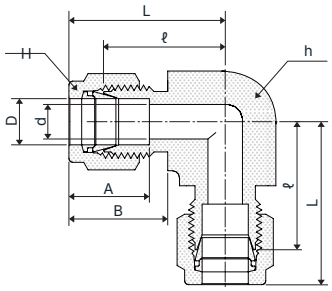



Connects Fractional Tubes

Part No.	Tube O.D. D		d min.	Width across flat				A	B	ℓ	L
				h		H					
	in	mm		in	mm	in	mm				
IL-1	1/16	1.58	1.27	3/8	9.52	5/16	7.93	8.63	10.92	14.00	17.88
IL-2	1/8	3.17	2.28	3/8	9.52	7/16	11.11	12.70	15.24	15.74	22.35
IL-3	3/16	4.76	3.04	1/2	12.70	1/2	12.70	13.71	16.00	17.78	24.38
IL-4	1/4	6.35	4.82	1/2	12.70	9/16	14.28	15.24	17.78	19.55	26.92
IL-5	5/16	7.93	6.35	9/16	14.28	5/8	15.87	16.25	18.54	21.33	28.70
IL-6	3/8	9.52	7.11	5/8	15.87	11/16	17.46	16.76	19.30	23.11	30.48
IL-8	1/2	12.70	10.41	13/16	20.64	7/8	22.22	22.86	21.84	25.90	36.06
IL-10	5/8	15.87	12.70	15/16	23.81	1	25.40	24.38	21.84	28.70	38.80
IL-12	3/4	19.05	15.74	1-1/16	26.98	1-1/8	28.58	24.38	21.84	29.71	39.87
IL-14	7/8	22.22	18.28	1-3/16	30.00	1-1/4	31.75	25.90	21.84	34.54	44.70
IL-16	1	25.40	22.35	1-3/8	34.92	1-1/2	38.10	31.24	26.41	36.83	49.02
IL-20	1-1/4	31.75	27.68	1-11/16	42.86	1-7/8	47.63	41.14	38.86	44.50	66.54
IL-24	1-1/2	38.10	34.03	2	50.80	2-1/4	57.15	50.03	45.21	50.80	77.97
IL-32	2	50.80	45.97	2-3/4	69.85	3	76.20	67.56	62.73	69.80	107.18

Connects Metric Tubes

Part No.	Tube O.D. D	d min.	Width across flat		A	B	ℓ	L
			h	H				
IL-2M	2	1.7	9.5	12	12.9	15.3	15.7	22.3
IL-3M	3	2.4	9.5	12	12.9	15.3	15.7	22.3
IL-4M	4	2.4	12.7	12	13.7	16.1	18.8	25.4
IL-6M	6	4.8	12.7	14	15.3	17.7	19.6	27.0
IL-8M	8	6.3	14.3	16	16.2	18.6	21.3	28.8
IL-10M	10	7.9	17.5	19	17.2	19.5	23.9	31.5
IL-12M	12	9.5	20.6	22	22.8	22.0	25.9	36.0
IL-15M	15	11.9	23.8	25	24.4	22.0	28.7	38.8
IL-16M	16	12.7	23.8	25	24.4	22.0	28.7	38.8
IL-18M	18	15.1	27.0	30	24.4	22.0	29.7	39.8
IL-20M	20	15.9	30.0	32	26.0	22.0	32.5	42.6
IL-22M	22	18.3	30.0	32	26.0	22.0	32.5	42.6
IL-25M	25	21.8	34.92	38	31.3	26.5	36.8	49.1
IL-28M	28	21.8	41.0	46	36.6	36.6	43.2	64.0
IL-32M	32	28.6	46.0	50	42.0	41.6	49.3	72.3
IL-38M	38	33.7	55.0	60	49.4	47.9	56.4	84.0
IL-42M	42	36.0	55.0	65	55.1	53.6	58.0	89.1

05 ILR REDUCING ELBOW

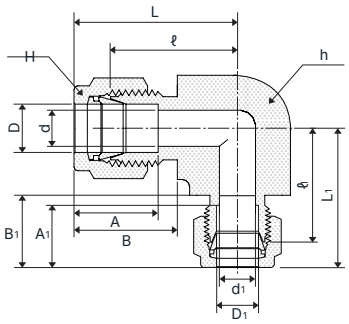



Connects Fractional Tubes

Part No.	Tube O.D.				Width across flat						d	d1	A	A1	B	B1	ℓ	ℓ1	L	L1
	D		D1		h		H		H1											
	in	mm	in	mm	in	mm	in	mm	in	mm										
ILR4-2	1/4	6.35	1/8	3.17	1/2	12.7	9/16	14.28	7/16	11.11	4.8	2.3	15.24	12.70	17.78	15.24	19.6	18.1	26.9	24.7
ILR6-4	3/8	9.52	1/4	6.35	5/8	15.9	11/16	17.46	9/16	14.28	7.1	4.8	16.76	15.24	19.30	17.78	23.1	21.5	30.4	28.8
ILR8-4	1/2	12.7	1/4	6.35	13/16	20.64	7/8	22.22	9/16	14.28	10.4	4.8	22.86	15.24	21.84	17.78	25.9	24.3	36.0	31.6
ILR8-6	1/2	12.7	3/8	9.52	13/16	20.64	7/8	22.22	11/16	17.46	10.4	7.1	22.86	16.76	21.84	19.30	25.9	25.9	36.0	33.2
ILR10-6	5/8	15.87	3/8	9.52	15/16	23.8	1	25.4	11/16	17.46	12.7	7.1	24.38	16.76	21.84	19.30	28.7	28.7	38.8	36.0
ILR12-4	3/4	19.05	1/4	6.35	1-1/16	26.98	1-1/8	28.58	9/16	14.28	15.7	4.8	24.38	15.24	21.84	17.78	29.7	28.1	39.8	35.4
ILR12-6	3/4	19.05	3/8	9.52	1-1/16	26.98	1-1/8	28.58	11/16	17.46	15.7	7.1	24.38	16.76	21.84	19.30	29.7	29.7	39.8	37.0
ILR12-8	3/4	19.05	1/2	12.7	1-1/16	26.98	1-1/8	28.58	7/8	22.22	15.7	10.4	24.38	22.86	21.84	21.84	29.7	29.7	39.8	39.8
ILR14-8	7/8	22.22	1/2	12.7	1-3/16	30.2	1-1/4	31.75	7/8	22.22	18.3	10.4	25.90	22.86	21.84	21.84	34.5	34.5	44.6	44.6
ILR16-4	1	25.4	1/4	6.35	1-3/8	34.9	1-1/2	38.1	9/16	14.28	22.4	4.8	31.24	15.24	26.41	17.78	36.8	32.8	48.97	40.1
ILR16-6	1	25.4	3/8	9.52	1-3/8	34.9	1-1/2	38.1	11/16	17.46	22.4	7.1	31.24	16.76	26.41	19.30	36.8	34.4	48.97	41.7
ILR16-8	1	25.4	1/2	12.7	1-3/8	34.9	1-1/2	38.1	7/8	22.22	22.4	10.4	31.24	22.86	26.41	21.84	36.8	34.4	48.97	44.5
ILR16-12	1	25.4	3/4	19.05	1-3/8	34.9	1-1/2	38.1	1-1/8	28.48	22.4	15.7	31.24	24.38	26.41	21.84	36.8	34.4	48.97	44.5
ILR20-12	1-1/4	31.75	3/4	19.05	1-11/16	42.9	1-7/8	47.63	1-1/8	28.58	31.95	15.7	41.14	24.38	38.86	21.84	44.5	39.6	66.6	49.7
ILR24-8	1-1/2	38.1	1/2	12.7	2	50.8	2-1/4	57.15	7/8	22.22	34.0	10.4	50.03	22.86	45.21	21.84	50.8	44.7	78.0	54.8
ILR24-12	1-1/2	38.1	3/4	19.05	2	50.8	2-1/4	57.15	1-1/8	28.58	34.0	15.7	50.03	24.38	45.21	21.84	50.8	44.7	78.0	54.8
ILR24-16	1-1/2	38.1	1	25.4	2	50.8	2-1/4	57.15	1-1/2	38.1	34.0	22.4	50.03	31.24	45.21	26.41	50.8	47.1	78.0	59.27

Connects Metric Tubes

Part No.	Tube O.D.		Width across flat			d	d1	A	A1	B	B1	ℓ	ℓ1	L	L1
	D	D1	h	H	H1										
ILR6M-3M	6	3	12.7	14	12	4.8	2.4	15.3	12.9	17.7	15.3	19.6	18.1	26.9	24.7
ILR8M-6M	8	6	14.3	16	14	6.3	4.8	16.2	15.3	18.6	17.7	21.3	20.5	28.6	27.8
ILR10M-6M	10	6	17	19	14	7.9	4.8	17.2	15.3	19.5	17.7	23.9	22.3	31.5	29.6
ILR12M-6M	12	6	20.6	22	14	9.5	4.8	22.8	15.3	22.0	17.7	25.9	24.3	36.0	31.6
ILR12M-10M	12	10	20.6	22	19	9.5	7.9	22.8	17.2	22.0	19.5	25.9	25.9	36.0	33.5
ILR15M-12M	15	12	24	25	22	12	9.5	24.4	22.8	22.0	22.0	28.7	28.7	38.8	38.8
ILR16M-12M	16	12	24	25	22	12.7	9.5	24.4	22.8	22.0	22.0	28.7	28.7	38.8	38.8
ILR18M-12M	18	12	27	30	22	15.1	9.5	24.4	22.8	22.0	22.0	29.7	29.7	39.8	39.8
ILR20M-6M	20	6	32	32	14	15.9	4.8	26.0	15.3	22.0	17.7	32.5	30.9	42.6	38.2
ILR20M-10M	20	10	32	32	19	15.9	7.9	26.0	17.2	22.0	19.5	32.5	32.5	42.6	40.1
ILR20M-12M	20	12	32	30	22	15.9	9.5	26.0	22.8	22.0	22.0	32.5	32.5	42.6	42.6
ILR22M-12M	22	12	32	32	22	18.3	9.5	26.0	22.8	22.0	22.0	32.5	34.5	42.6	44.6
ILR25M-10M	25	10	36	41	19	21.8	7.9	31.3	17.2	26.5	19.5	36.8	34.4	49.0	42.0
ILR25M-12M	25	12	36	41	22	21.8	9.5	31.3	22.8	26.5	22.0	36.8	34.4	49.0	44.5
ILR25M-20M	25	20	36	41	32	21.8	15.9	31.3	26.0	26.5	22.0	36.8	34.4	49.0	44.5
ILR38M-20M	38	20	55	60	32	33.7	15.9	49.4	26.0	47.9	22.0	56.4	48.0	84.0	58.1
ILR38M-25M	38	25	55	60	41	33.7	21.8	49.4	31.3	47.9	26.5	56.4	50.4	84.0	50.9

06 IT UNION TEE

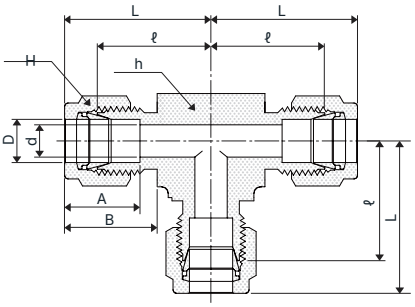



Connects Fractional Tubes

Part No.	Tube O.D. D		d min.	Width across flat				A	B	ℓ	L
				h		H					
	in	mm		in	mm	in	mm				
IT-1	1/16	1.59	1.27	3/8	9.52	5/16	7.93	8.63	10.92	14.00	17.88
IT-2	1/8	3.17	2.28	3/8	9.52	7/16	11.11	12.70	15.24	15.74	22.35
IT-3	3/16	4.76	3.04	1/2	12.70	1/2	12.70	13.71	16.00	17.78	24.38
IT-4	1/4	6.35	4.82	1/2	12.70	9/16	14.28	15.24	17.78	19.55	26.92
IT-5	5/16	7.93	6.35	9/16	14.28	5/8	15.87	16.25	18.54	21.33	28.70
IT-6	3/8	9.52	7.11	5/6	17.0	11/16	17.46	16.76	19.30	23.11	30.48
IT-8	1/2	12.70	10.41	13/16	15.9	7/8	22.22	22.86	21.84	25.90	36.06
IT-10	5/8	15.87	12.70	15/16	23.8	1	25.40	24.38	21.84	28.70	38.80
IT-12	3/4	19.05	15.74	1-1/16	27	1-1/8	28.58	24.38	21.84	29.71	39.87
IT-14	7/8	22.22	18.28	1-1/4	31.8	1-1/4	31.75	25.90	21.84	34.54	44.70
IT-16	1	25.40	22.35	1-3/8	34.9	1-1/2	38.10	31.24	26.41	36.83	49.02
IT-20	1-1/4	31.75	27.68	1-11/16	42.9	1-7/8	47.63	41.14	38.86	44.50	66.54
IT-24	1-1/2	38.10	34.03	2	50.80	2-1/4	57.15	50.03	45.21	50.80	77.97
IT-32	2	50.80	45.97	2-3/4	69.9	3	76.20	67.56	62.73	69.80	107.18

Connects Metric Tubes

Part No.	Tube O.D. D	d min.	Width across flat		A	B	ℓ	L
			h	H				
IT-2M	2	1.7	9.5	12	12.9	15.3	15.7	22.3
IT-3M	3	2.4	9.5	12	12.9	15.3	15.7	22.3
IT-4M	4	2.4	12.7	12	13.7	16.4	18.8	25.4
IT-6M	6	4.8	12.7	14	15.3	17.7	19.6	27.0
IT-8M	8	6.3	14.3	16	16.2	18.6	21.3	28.8
IT-10M	10	7.9	17.0	19	17.2	19.5	23.9	31.5
IT-12M	12	9.5	20.6	22	22.8	22.0	25.9	36.0
IT-14M	14	11.1	24.0	25	24.4	22.0	28.7	28.8
IT-15M	15	11.9	24.0	25	24.4	22.0	28.7	38.8
IT-16M	16	12.7	24.0	25	24.4	22.0	28.7	38.8
IT-18M	18	15.1	27.0	30	24.4	22.0	29.7	39.8
IT-20M	20	15.9	32.0	32	26.0	22.0	32.5	42.6
IT-22M	22	18.3	32.0	32	26.0	22.0	32.5	42.6
IT-25M	25	21.8	36.0	38	31.3	26.5	36.8	49.1
IT-28M	28	21.8	41.0	46	36.6	33.6	43.2	64.0
IT-30M	30	26.2	46.0	46	41.1	38.8	45.7	67.7
IT-32M	32	28.6	46.0	50	42.0	41.6	49.3	72.3
IT-38M	38	33.7	55.0	60	49.4	47.9	56.4	84.0
IT-42M	42	36.0	55.0	65	55.1	53.6	58.0	89.1

07 ITR REDUCING TEE

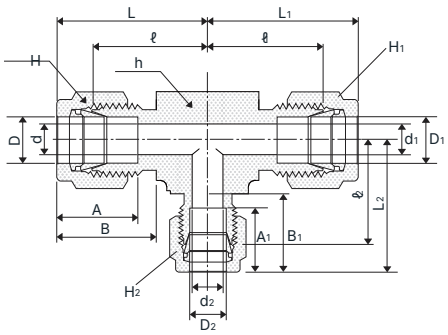



Connects Fractional Tubes

Part No.	Tube O.D.						Width across flat								d1	d2	d3	ℓ1	ℓ2	ℓ3	L1	L2	L3
	D		D1		D2		h		H		H1		H2										
	in	mm	in	mm	in	mm	in	mm	in	mm	in	mm	in	mm									
ITR4-4-2	1/4	6.35	1/4	6.35	1/8	3.17	1/2	12.7	9/16	14.28	9/16	14.28	7/16	11.11	4.8	4.8	2.3	19.6	19.6	18.1	26.9	26.9	24.7
ITR4-4-6	1/4	6.35	1/4	6.35	3/8	9.52	5/8	15.9	9/16	14.28	7/16	14.28	11/16	17.46	4.8	4.8	2.1	21.5	21.5	23.1	28.8	28.8	30.4
ITR4-8-8	1/4	6.35	1/2	12.7	1/2	12.7	13/16	20.64	9/16	14.28	7/8	22.22	7/8	22.22	4.8	10.4	10.4	24.3	25.9	25.9	31.6	36.0	36.0
ITR6-4-6	3/8	9.52	1/4	6.35	3/8	9.52	5/8	15.9	11/16	17.46	7/16	14.28	11/16	17.46	7.1	4.8	7.1	23.1	21.5	23.1	30.4	28.8	30.4
ITR6-6-4	3/8	9.52	3/8	9.52	1/4	6.35	5/8	15.9	11/16	17.46	11/16	17.46	7/16	14.28	7.1	7.1	4.8	25.9	23.1	21.5	30.4	30.4	28.8
ITR6-6-8	3/8	9.52	3/8	9.52	1/2	12.7	13/16	20.64	11/16	17.46	11/16	17.46	7/8	22.22	7.1	7.1	10.4	25.9	25.9	25.9	33.2	33.2	36.0
ITR8-4-8	1/2	12.7	1/4	6.35	1/2	12.7	13/16	20.64	7/8	22.22	9/16	14.28	7/8	22.22	10.4	4.8	10.4	25.9	24.3	25.9	36.0	31.6	36.0
ITR8-6-6	1/2	12.7	3/8	9.52	3/8	9.52	13/16	20.64	7/8	22.22	11/16	17.46	11/16	17.46	10.4	7.1	7.1	25.9	25.9	25.9	36.0	33.2	33.2
ITR8-8-4	1/2	12.7	1/2	12.7	1/4	6.35	13/16	20.64	7/8	22.22	7/8	22.22	9/16	14.28	10.4	10.4	4.8	25.9	25.9	24.3	36.0	36.0	31.6
ITR8-8-6	1/2	12.7	1/2	12.7	3/8	9.52	13/16	20.64	7/8	22.22	7/8	22.22	11/16	17.46	10.4	10.4	7.1	28.7	25.9	25.9	36.0	36.0	33.2
ITR10-10-6	5/8	15.87	5/8	15.87	3/8	9.52	15/16	23.8	1	25.4	1	25.4	11/16	17.46	12.7	12.7	7.1	29.7	28.7	28.7	38.8	38.8	36.0
ITR12-8-12	3/4	19.05	1/2	12.7	3/4	19.05	1-1/16	26.98	1-1/8	28.58	7/8	22.22	1-1/8	28.58	15.7	10.4	15.7	29.7	29.7	29.7	39.8	39.8	39.8
ITR12-12-4	3/4	19.05	3/4	19.05	1/4	6.35	1-1/16	26.98	1-1/8	28.58	1-1/8	28.58	9/16	14.28	15.7	15.7	4.8	29.7	29.7	28.1	39.8	39.8	35.4
ITR12-12-6	3/4	19.05	3/4	19.05	3/8	9.52	1-1/16	26.98	1-1/8	28.58	1-1/8	28.58	11/16	17.46	15.7	15.7	7.1	29.7	29.7	29.7	39.8	39.8	37.0
ITR12-12-8	3/4	19.05	3/4	19.05	1/2	12.7	1-1/16	26.98	1-1/8	28.58	1-1/8	28.58	7/8	22.22	15.7	15.7	10.4	29.7	29.7	29.7	39.8	39.8	39.8
ITR12-12-16	3/4	19.05	3/4	19.05	1	25.4	1-3/8	34.9	1-1/8	28.58	1-1/8	28.58	1-1/2	38.1	15.7	15.7	22.4	34.4	34.4	36.8	44.5	44.5	48.97
ITR12-12-20	3/4	19.05	3/4	19.05	1-1/4	31.75	1-11/16	42.9	1-1/8	28.58	1-1/8	28.58	1-7/8	47.63	15.7	15.7	27.7	39.6	39.6	44.5	49.7	49.7	66.6
ITR14-14-8	7/8	22.22	7/8	22.22	1/2	12.7	1-1/4	31.8	1-1/4	31.75	1-1/4	31.75	7/8	22.22	18.3	18.3	10.4	34.5	34.5	34.5	44.6	44.6	44.6
ITR16-12-12	1	25.4	3/4	19.05	3/4	19.05	1-3/8	34.9	1-1/2	38.1	1-1/8	28.58	1-1/8	28.58	22.4	15.7	15.7	36.8	34.4	34.4	48.97	44.5	44.5
ITR16-16-4	1	25.4	1	25.4	1/4	6.35	1-3/8	34.9	1-1/2	38.1	1-1/2	38.1	7/16	14.28	22.4	22.4	4.8	36.8	36.8	32.8	48.97	48.97	40.1
ITR16-16-6	1	25.4	1	25.4	3/8	9.52	1-3/8	34.9	1-1/2	38.1	1-1/2	38.1	11/16	17.46	22.4	22.4	7.1	36.8	36.8	34.4	48.97	48.97	41.7
ITR16-16-8	1	25.4	1	25.4	1/2	12.7	1-3/8	34.9	1-1/2	38.1	1-1/2	38.1	7/8	22.22	22.4	22.4	10.4	36.8	36.8	34.4	48.97	48.97	44.5
ITR16-16-12	1	25.4	1	25.4	3/4	19.05	1-3/8	34.9	1-1/2	38.1	1-1/2	38.1	1-1/8	28.58	22.4	22.4	15.7	36.8	36.8	34.4	48.97	48.97	44.5
ITR20-12-12	1-1/4	31.75	3/4	19.05	3/4	19.05	1-11/16	42.9	1-7/8	47.63	1-1/8	28.58	1-1/8	28.58	31.95	15.7	15.7	44.5	39.6	39.6	66.6	49.7	49.7
ITR20-20-12	1-1/4	31.75	1-1/4	31.75	3/4	19.05	1-11/16	42.9	1-7/8	47.63	1-7/8	47.63	1-1/8	28.58	31.95	31.95	15.7	44.5	44.5	39.6	66.6	66.6	49.7
ITR24-20-20	1-1/2	38.1	1-1/4	31.75	1-1/4	31.75	2	50.8	2-1/4	57.15	1-7/8	47.63	1-7/8	47.63	34	31.95	31.95	50.8	49.6	49.6	78.0	71.7	71.7
ITR24-24-8	1-1/2	38.1	1-1/2	38.1	1/2	12.7	2	50.8	2-1/4	57.15	2-1/4	57.15	7/8	22.22	34	34	10.4	50.8	50.8	44.7	78.0	78.0	54.8
ITR24-24-12	1-1/2	38.1	1-1/2	38.1	3/4	19.05	2	50.8	2-1/4	57.15	2-1/4	57.15	1-1/8	28.58	34	34	15.7	50.8	50.8	44.7	78.0	78.0	54.8
ITR24-24-16	1-1/2	38.1	1-1/2	38.1	1	25.4	2	50.8	2-1/4	57.15	2-1/4	57.15	1-1/2	38.1	34	34	22.4	50.8	50.8	47.1	78.0	78.0	59.27

08 ITR REDUCING TEE

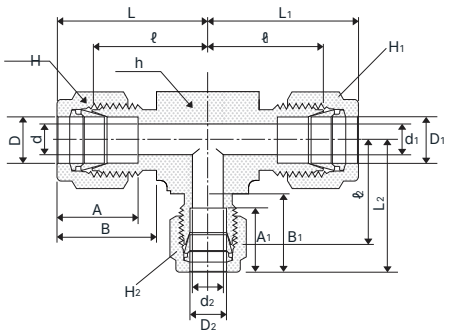



Connects Metric Tubes

Part No.	Tube O.D.			Width across flat				d	d1	d2	ℓ1	ℓ2	ℓ3	L1	L2	L3
	D1	D2	D3	h	H1	H2	H3									
ITR3M-3M-6M	3	3	6	12.7	12	12	14	2.4	2.4	4.8	18.1	18.1	19.6	24.7	24.7	26.9
ITR8M-8M-6M	8	8	6	14.3	16	16	14	6.3	6.3	4.8	21.3	21.3	20.5	28.6	28.6	27.8
ITR10M-10M-6M	10	10	6	17	19	19	14	7.9	7.9	4.8	23.9	23.9	22.3	31.5	31.5	29.6
ITR10M-10M-12M	10	10	12	20.6	19	19	22	7.9	7.9	9.5	25.9	25.9	25.9	33.5	33.5	36.0
ITR12M-6M-12M	12	6	12	20.6	22	14	22	9.5	4.8	9.5	25.9	24.3	25.9	36.0	31.63	36.0
ITR12M-10M-10M	12	10	10	20.6	22	19	19	9.5	7.9	7.9	25.9	25.9	25.9	36.0	33.5	33.5
ITR12M-12M-10M	12	12	10	20.6	22	22	19	9.5	9.5	7.9	25.9	25.9	25.9	36.0	36.0	33.5
ITR12M-12M-6M	12	12	6	20.6	22	22	14	9.5	9.5	4.8	25.9	25.9	24.3	36.0	36.0	31.6
ITR15M-15M-12M	15	15	12	24	25	25	22	12	12	9.5	28.7	28.7	28.7	38.8	38.8	38.8
ITR16M-16M-12M	16	16	12	24	25	25	22	12.7	12.7	9.5	28.7	28.7	28.7	38.8	38.8	38.8
ITR18M-18M-12M	18	18	12	27	30	30	22	15.1	15.1	9.5	29.7	29.7	29.7	39.8	39.8	39.8
ITR20M-12M-20M	20	12	20	32	32	22	32	15.9	9.5	15.9	32.5	32.5	32.5	42.6	42.6	42.6
ITR20M-20M-6M	20	20	6	32	32	32	14	15.9	15.9	4.8	32.5	32.5	30.9	42.6	42.6	38.2
ITR20M-20M-10M	20	20	10	32	32	32	19	15.9	15.9	7.9	32.5	32.5	32.5	42.6	42.6	40.1
ITR20M-20M-12M	20	20	12	32	32	32	22	15.9	15.9	9.5	32.5	32.5	32.5	42.6	42.6	42.6
ITR20M-20M-25M	20	20	25	36	32	32	41	15.9	15.9	21.8	34.4	34.4	36.8	44.5	44.5	49.0
ITR22M-22M-12M	22	22	12	32	32	32	22	18.3	18.3	9.5	32.5	32.5	34.5	42.6	42.6	44.6
ITR25M-20M-20M	25	20	20	36	41	32	32	21.8	15.9	15.9	36.8	34.4	34.4	49.0	44.5	44.5
ITR25M-25M-10M	25	25	10	36	41	41	19	21.8	21.8	7.9	36.8	36.8	34.4	49.0	49.0	42.0
ITR25M-25M-12M	25	25	12	36	41	41	22	21.8	21.8	9.5	36.8	36.8	34.4	49.0	49.0	44.5
ITR25M-25M-20M	25	25	20	36	41	41	32	21.8	21.8	15.9	36.8	36.8	34.4	49.0	49.0	44.5
ITR38M-38M-20M	38	38	20	55	60	60	32	33.7	33.7	15.9	56.4	56.4	48.0	84.0	84.0	58.1
ITR38M-39M-25M	38	38	25	55	60	60	41	33.7	33.7	21.8	56.4	56.4	50.4	84.0	84.0	50.9

09 IX UNION CROSS

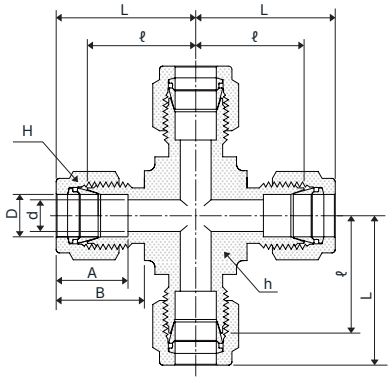



Connects Fractional Tubes

Part No.	Tube O.D. D		d min.	Width across flat				A	B	ℓ	L
				h		H					
	in	mm		in	mm	in	mm				
IX-1	1/16	1.59	1.27	3/8	9.52	5/16	7.93	8.63	10.92	14.00	17.88
IX-2	1/8	3.17	2.28	3/8	9.52	7/16	11.11	12.70	15.24	15.74	22.35
IX-3	3/16	4.76	3.04	1/2	12.70	1/2	12.70	13.71	16.00	17.78	24.38
IX-4	1/4	6.35	4.82	1/2	12.70	9/16	14.28	15.24	17.78	19.55	26.92
IX-5	5/16	7.93	6.35	9/16	14.28	5/8	15.87	16.25	18.54	21.33	28.70
IX-6	3/8	9.52	7.11	5/8	15.9	11/16	17.46	16.76	19.30	23.11	30.48
IX-8	1/2	12.70	10.41	13/16	20.64	7/8	22.22	22.86	21.84	25.90	36.06
IX-10	5/8	15.87	12.70	15/16	23.8	1	25.40	24.38	21.84	28.70	38.80
IX-12	3/4	19.05	15.74	1-1/16	26.98	1-1/8	28.58	24.38	21.84	29.71	39.87
IX-14	7/8	22.22	18.28	1-1/4	31.8	1-1/4	31.75	25.90	21.84	34.54	44.70
IX-16	1	25.40	22.35	1-3/8	34.9	1-1/2	38.10	31.24	26.41	36.83	49.02
IX-20	1-1/4	31.75	27.68	1-7/16	36.1	1-7/8	47.63	41.14	38.86	44.50	66.54
IX-24	1-1/2	38.10	34.03	2	50.80	2-1/4	57.15	50.03	45.21	50.80	77.97
IX-32	2	50.80	45.97	2-3/4	69.9	3	76.20	67.56	62.73	69.80	107.18

Connects Metric Tubes

Part No.	Tube O.D. D	d min.	Width across flat		A	B	ℓ	L
			h	H				
IX-2M	2	1.7	9.5	12	12.9	15.3	15.7	22.3
IX-3M	3	2.4	9.5	12	12.9	15.3	15.7	22.3
IX-4M	4	2.4	12.7	12	13.7	16.4	18.8	25.4
IX-6M	6	4.8	12.7	14	15.3	17.7	19.6	27.0
IX-8M	8	6.3	14.3	16	16.2	18.6	21.3	28.8
IX-10M	10	7.9	17.0	19	17.2	19.5	23.9	31.5
IX-12M	12	9.5	20.6	22	22.8	22.0	25.9	36.0
IX-14M	14	11.1	24.0	25	24.4	22.0	28.7	38.8
IX-15M	15	11.9	24.0	25	24.4	22.0	28.7	38.8
IX-16M	16	12.7	24.0	25	24.4	22.0	28.7	38.8
IX-18M	18	15.1	27.0	30	24.4	22.0	29.7	39.8
IX-20M	20	15.9	32.0	32	26.0	22.0	32.5	42.6
IX-22M	22	18.3	32.0	32	26.0	22.0	32.5	42.6
IX-25M	25	21.8	36.0	38	31.3	26.5	36.8	49.1
IX-28M	28	21.8	41.0	46	36.6	44.7	43.2	64.0
IX-30M	30	26.2	46.0	46	41.1	38.8	45.7	67.7
IX-32M	32	28.6	46.0	50	42.0	41.6	49.3	72.3
IX-38M	38	33.7	55.0	60	49.4	47.9	56.4	84.0
IX-42M	42	36.0	55.0	65	55.1	53.6	58.0	89.1

10 IBU BULKHEAD UNION

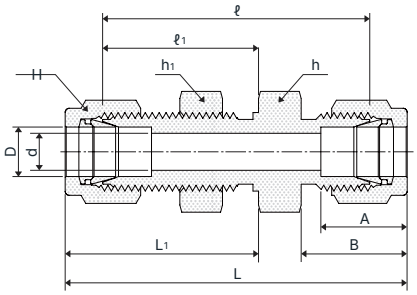

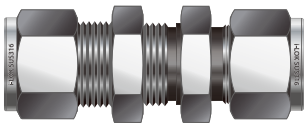

Connects Fractional Tubes

Part No.	Tube O.D. D		d min.	Width across flat				A	B	ℓ	ℓ1	L	L1	Panel Hole Drill Size	Panel Max. Thickness
				h	h_1	H									
	in	mm		in	mm	in	mm								
IBU-1	1/16	1.59	1.27	5/16	7.93	5/16	7.93	8.63	10.92	23.87	13.46	31.50	17.27	5.16	3.05
IBU-2	1/8	3.17	2.28	1/2	12.70	7/16	11.11	12.70	15.24	38.10	24.63	51.30	31.24	8.33	12.70
IBU-3	3/16	4.76	3.04	9/16	14.28	1/2	12.70	13.71	16.00	40.38	25.40	53.59	32.00	9.92	12.70
IBU-4	1/4	6.35	4.82	5/8	15.87	9/16	14.28	15.24	17.78	42.92	26.16	57.65	33.52	11.50	10.16
IBU-5	5/16	7.93	6.35	11/16	17.46	5/8	15.87	16.25	18.54	45.97	28.44	60.70	35.81	13.09	11.17
IBU-6	3/8	9.52	7.11	3/4	19.05	11/16	17.46	16.76	19.30	47.49	29.46	62.23	36.83	14.68	11.17
IBU-8	1/2	12.70	10.41	15/16	23.81	7/8	22.22	22.86	21.84	50.80	31.75	71.12	41.91	19.44	12.70
IBU-10	5/8	15.87	12.70	1-1/16	26.98	1	25.40	24.38	21.84	52.32	32.51	72.64	42.67	22.62	12.70
IBU-12	3/4	19.05	15.74	1-3/16	30.16	1-1/8	28.58	24.38	21.84	58.67	37.33	78.99	47.49	25.79	16.76
IBU-14	7/8	22.22	18.28	1-3/8	34.92	1-1/4	31.75	25.90	21.84	64.26	42.92	84.58	53.08	28.97	19.05
IBU-16	1	25.40	22.35	1-5/8	41.27	1-1/2	38.10	31.24	26.41	71.37	45.21	95.75	57.40	33.73	19.05
IBU-20	1-1/4	31.75	27.68	1-7/8	47.63	1-7/8	47.63	41.14	38.86	78.99	47.75	123.19	69.85	41.67	19.05
IBU-24	1-1/2	38.10	34.03	2-1/4	57.15	2-1/4	57.15	50.03	45.21	84.83	49.27	139.19	76.45	49.61	19.05
IBU-32	2	50.80	45.97	2-3/4	69.85	3	76.20	67.56	62.73	105.66	56.38	180.34	93.72	57.94	19.05

Connects Metric Tubes

Part No.	Tube O.D. D	d min.	Width across flat			A	B	ℓ	ℓ1	L	L1	Panel Hole Drill Size	Panel Max. Thickness
			h	h1	H								
IBU-3M	3	2.4	14	12.7	12	12.9	15.3	38.1	24.6	51.3	31.2	8.3	12.7
IBU-4M	4	2.4	14	14.3	12	13.7	16.1	40.4	25.4	53.6	32.0	9.9	12.7
IBU-6M	6	4.8	15.8	15.9	14	15.3	17.7	42.9	26.2	57.7	33.6	11.5	10.2
IBU-8M	8	6.3	17	17.5	16	16.2	18.6	46.0	28.6	61.0	36.1	13.1	11.2
IBU-10M	10	7.9	22	22.0	19	17.2	19.5	48.5	29.4	63.7	37.0	16.2	11.2
IBU-12M	12	9.5	24	23.8	22	22.8	22.0	50.8	31.8	71.0	41.9	19.5	12.7
IBU-15M	15	11.9	28	27.0	25	24.4	22.0	52.3	32.5	72.5	42.6	22.8	12.7
IBU-16M	16	12.7	28	27.0	25	24.4	22.0	52.3	32.5	72.5	42.6	22.8	12.7
IBU-18M	18	15.1	30	30.0	30	24.4	22.0	58.7	37.3	78.9	47.4	26.0	16.8
IBU-20M	20	15.9	35	35.0	32	26.0	22.0	64.3	42.9	84.5	53.0	29.0	17.0
IBU-22M	22	18.3	35	35.0	32	26.0	22.0	64.3	42.9	84.5	53.0	29.0	19.1
IBU-25M	25	21.8	41.3	41.3	38	31.3	26.5	71.4	45.2	95.9	57.5	33.7	19.1
IBU-32M	32	28.6	50	50.0	50	42.0	41.6	82.3	49.5	128.3	72.5	42.5	19.1
IBU-38M	38	33.7	60	60.0	60	49.4	47.9	89.4	51.5	144.6	79.1	50.5	19.0

01 IMC-N MALE CONNECTOR NPT THREAD

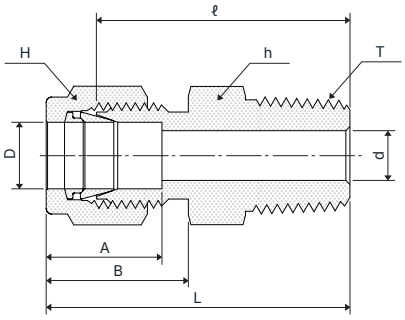

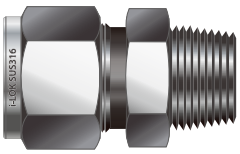

Connects Fractional Tube to Female NPT Thread

Part No.	Tube O.D. D		T NPT	d min.	Width across flat				A	B	ℓ	L
					h		H					
	in	mm			in	mm	in	mm				
IMC1-1N	1/16	1.59	1/16	1.27	5/16	7.93	5/16	7.93	8.63	10.92	20.00	23.83
IMC1-2N	1/16	1.59	1/8	1.27	7/16	11.11	7/16	11.1	8.63	10.92	22.35	26.23
IMC1-4N	1/16	1.59	1/4	1.27	9/16	14.28	5/16	7.93	8.63	10.92	27.17	30.98
IMC2-1N	1/8	3.17	1/16	2.28	7/16	11.11	7/16	11.11	12.70	15.24	23.11	29.71
IMC2-2N	1/8	3.17	1/8	2.28	7/16	11.11	7/16	11.11	12.70	15.24	23.87	30.48
IMC2-4N	1/8	3.17	1/4	2.28	9/16	14.28	7/16	11.11	12.70	15.24	28.95	35.56
IMC2-6N	1/8	3.17	3/8	2.28	11/16	17.46	7/16	11.11	12.70	15.24	29.21	35.81
IMC2-8N	1/8	3.17	1/2	2.28	7/8	22.22	7/16	11.11	12.70	15.24	35.56	42.16
IMC3-2N	3/16	4.76	1/8	3.04	7/16	11.11	1/2	12.70	13.71	16.00	24.63	31.24
IMC3-4N	3/16	4.76	1/4	3.04	9/16	14.28	1/2	12.70	13.71	16.00	29.71	36.32
IMC4-1N	1/4	6.35	1/16	4.82	1/2	12.70	9/16	14.28	15.24	17.78	25.40	32.76
IMC4-2N	1/4	6.35	1/8	4.82	1/2	12.70	9/16	14.28	15.24	17.78	25.40	32.76
IMC4-4N	1/4	6.35	1/4	4.82	9/16	14.28	9/16	14.28	15.24	17.78	30.48	37.84
IMC4-6N	1/4	6.35	3/8	4.82	11/16	17.46	9/16	14.28	15.24	17.78	30.98	38.35
IMC4-8N	1/4	6.35	1/2	4.82	7/8	22.22	9/16	14.28	15.24	17.78	37.33	44.70
IMC4-12N	1/4	6.35	3/4	4.82	1-1/16	26.98	9/16	14.28	15.24	17.78	38.86	46.22
IMC5-2N	5/16	7.93	1/8	4.82	9/16	14.28	5/8	15.87	16.25	18.54	26.67	34.03
IMC5-4N	5/16	7.93	1/4	6.35	9/16	14.28	5/8	15.87	16.25	18.54	31.24	38.60
IMC5-6N	5/16	7.93	3/8	6.35	11/16	17.46	5/8	15.87	16.25	18.54	31.75	39.11
IMC5-8N	5/16	7.93	1/2	6.35	7/8	22.22	5/8	15.87	16.25	18.54	38.11	45.60
IMC6-2N	3/8	9.52	1/8	4.82	5/8	15.87	11/16	17.46	16.76	19.30	27.94	35.30
IMC6-4N	3/8	9.52	1/4	7.11	5/8	15.87	11/16	17.46	16.76	19.30	32.51	39.87
IMC6-6N	3/8	9.52	3/8	7.11	11/16	17.46	11/16	17.46	16.76	19.30	32.51	39.87
IMC6-8N	3/8	9.52	1/2	7.11	7/8	22.22	11/16	17.46	16.76	19.30	38.86	46.22
IMC6-12N	3/8	9.52	3/4	7.11	1-1/16	26.98	11/16	17.46	16.76	19.30	40.38	47.75
IMC8-2N	1/2	12.70	1/8	4.82	13/16	20.64	7/8	22.22	22.86	21.84	28.70	38.86
IMC8-4N	1/2	12.70	1/4	7.11	13/16	20.64	7/8	22.22	22.86	21.84	33.27	43.43
IMC8-6N	1/2	12.70	3/8	9.65	13/16	20.64	7/8	22.22	22.86	21.84	33.27	43.43
IMC8-8N	1/2	12.70	1/2	10.41	7/8	22.22	7/8	22.22	22.86	21.84	38.86	49.02
IMC8-12N	1/2	12.70	3/4	10.41	1-1/16	26.98	7/8	22.22	22.86	21.84	40.38	50.54
IMC8-16N	1/2	12.70	1	10.41	1-3/8	34.92	7/8	22.22	22.86	21.84	46.99	57.15
IMC10-6N	5/8	15.87	3/8	9.65	15/16	23.81	1	25.40	24.38	21.84	34.03	44.19
IMC10-8N	5/8	15.87	1/2	11.93	15/16	23.81	1	25.40	24.38	21.84	38.86	49.02
IMC10-12N	5/8	15.87	3/4	12.70	1-1/16	26.98	1	25.40	24.38	21.84	40.38	50.54
IMC12-8N	3/4	19.05	1/2	11.93	1-1/16	26.98	1-1/8	28.58	24.38	21.84	40.38	50.54
IMC12-12N	3/4	19.05	3/4	15.74	1-1/16	26.98	1-1/8	28.58	24.38	21.84	40.38	50.54
IMC12-16N	3/4	19.05	1	15.74	1-3/8	34.92	1-1/8	28.58	24.38	21.84	46.99	57.15
IMC14-12N	7/8	22.22	3/4	15.74	1-3/16	30.16	1-1/4	31.75	25.90	21.84	40.38	50.54
IMC14-16N	7/8	22.22	1	18.28	1-3/8	34.92	1-1/4	31.75	25.90	21.84	46.99	57.15
IMC16-8N	1	25.40	1/2	11.93	1-3/8	34.92	1-1/2	38.10	31.24	26.41	45.21	57.40
IMC16-12N	1	25.40	3/4	15.72	1-3/8	34.92	1-1/2	38.10	31.24	26.41	45.21	57.40
IMC16-16N	1	25.40	1	22.35	1-3/8	34.92	1-1/2	38.10	31.24	26.41	50.03	62.23
IMC20-16N	1-1/4	31.75	1	22.35	1-3/4	44.45	1-7/8	47.63	41.14	38.86	55.11	77.21
IMC20-20N	1-1/4	31.75	1-1/4	27.68	1-3/4	44.45	1-7/8	47.63	41.14	38.86	55.11	77.21
IMC24-24N	1-1/2	38.10	1-1/2	34.03	2-1/8	53.97	2-1/4	57.15	50.03	45.21	61.72	88.90
IMC32-32N	2	50.80	2	45.97	2-3/4	69.85	3	76.20	67.56	62.72	76.20	113.53

02 IMC-R MALE CONNECTOR PT THREAD

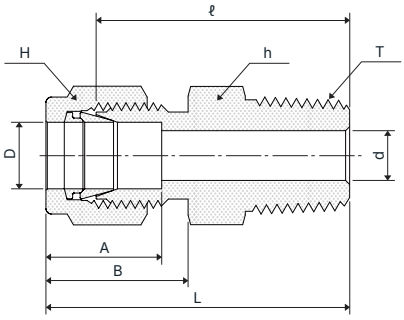

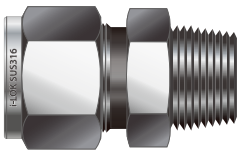

Connects Metric Tube to Female ISO Tapered Thread

Part No.	Tube O.D. D	T R(PT)	d min.	Width across flat		A	B	ℓ	L
				h	H				
IMC2M-2R	2	1/8	1.7	12	12	12.9	15.3	23.9	30.5
IMC3M-2R	3	1/8	2.4	12	12	12.9	15.3	23.9	30.5
IMC3M-4R	3	1/4	2.4	14	12	12.9	15.3	29.0	35.6
IMC4M-2R	4	1/8	2.4	12	12	13.7	16.1	24.6	31.2
IMC4M-4R	4	1/4	2.4	14	12	13.7	16.1	29.7	36.3
IMC6M-2R	6	1/8	4.8	14	14	15.3	17.7	25.4	32.8
IMC6M-4R	6	1/4	4.8	14	14	15.3	17.7	30.5	37.9
IMC6M-6R	6	3/8	4.8	17	14	15.3	17.7	31.0	38.4
IMC6M-8R	6	1/2	4.8	22	14	15.3	17.7	37.3	44.7
IMC8M-2R	8	1/8	4.8	14	16	16.2	18.6	26.7	34.2
IMC8M-4R	8	1/4	6.3	14	16	16.2	18.6	31.2	38.7
IMC8M-6R	8	3/8	6.3	17	16	16.2	18.6	31.8	39.2
IMC8M-8R	8	1/2	6.3	22	16	16.2	18.6	38.1	46.5
IMC10M-2R	10	1/8	4	18	19	17.1	19.9	30.6	38.2
IMC10M-4R	10	1/4	6	18	19	17.1	19.9	33.1	40.7
IMC10M-6R	10	3/8	7.9	17	19	17.2	19.5	33.3	40.9
IMC10M-8R	10	1/2	7.9	22	19	17.2	19.5	38.9	45.7
IMC12M-4R	12	1/4	7.1	22	22	22.8	22.0	33.3	43.4
IMC12M-6R	12	3/8	9.5	22	22	22.8	22.0	33.3	43.4
IMC12M-8R	12	1/2	9.5	22	22	22.8	22.0	38.9	49.0
IMC12M-12R	12	3/4	9.5	27	22	22.8	22.0	40.4	50.5
IMC15M-8R	15	1/2	11.9	24	25	24.4	22.0	38.9	49.0
IMC16M-4R	16	1/4	7.1	24	25	24.4	22.0	34.0	44.1
IMC16M-6R	16	3/8	9.5	24	25	24.4	22.0	34.0	44.1
IMC16M-8R	16	1/2	11.9	24	25	24.4	22.0	38.9	49.0
IMC16M-12R	16	3/4	12.7	27	25	24.4	22.0	40.4	49.0
IMC18M-8R	18	1/2	11.9	27	30	24.4	22.0	40.4	50.5
IMC18M-12R	18	3/4	15.1	27	30	24.4	22.0	40.4	50.5
IMC20M-8R	20	1/2	11.9	30	32	26.0	22.0	42.2	52.3
IMC20M-12R	20	3/4	15.9	30	32	26.0	22.0	42.2	52.3
IMC22M-12R	22	3/4	15.9	30	32	26.0	22.0	42.2	52.3
IMC22M-16R	22	1	18.3	35	32	26.0	22.0	47.0	57.0
IMC25M-12R	25	3/4	15.9	35	38	31.3	26.5	45.2	57.5
IMC25M-16R	25	1	21.8	35	38	31.3	26.5	50.0	62.3
IMC28M-16R	28	1	21.8	41	46	36.6	36.6	51.6	72.4
IMC28M-20R	28	1-1/4	21.8	46	46	36.6	36.6	52.3	73.1
IMC32M-20R	32	1-1/4	28.6	46	50	42.0	41.6	56.6	79.6
IMC32M-24R	32	1-1/2	33.7	50	50	49.4	47.9	58.1	91.6

03 IMC-G MALE CONNECTOR FOR BONDED WASHER DIN 3852 FORM A

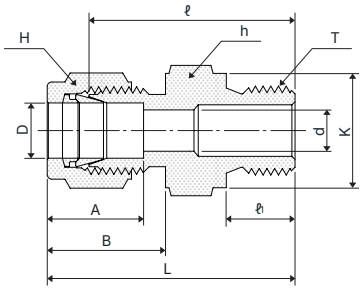

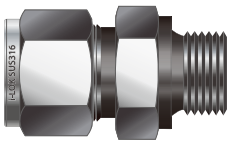

Connects Metric Tube to Female ISO Parallel Thread

Part No.	Tube O.D. D	T G(PF)	d min.	Width across flat		A	B	ℓ	ℓ1	L	K
				h	H						
IMC2M-2G	2	1/8	1.7	14	12	12.9	15.3	23.4	7.1	30.0	13.8
IMC3M-2G	3	1/8	2.4	14	12	12.9	15.3	23.4	7.1	30.0	13.8
IMC3M-4G	3	1/4	2.4	19	12	12.9	15.3	28.7	11.2	35.3	18.0
IMC4M-2G	4	1/8	2.4	14	12	13.7	16.1	24.1	7.1	30.7	13.8
IMC6M-2G	6	1/8	4.0	14	14	15.3	17.7	24.9	7.1	32.3	13.8
IMC6M-4G	6	1/4	4.8	19	14	15.3	17.7	30.2	11.2	37.6	18.0
IMC6M-6G	6	3/8	4.8	22	14	15.3	17.7	31.5	11.2	38.9	21.8
IMC6M-8G	6	1/2	4.8	27	14	15.3	17.7	37.3	14.2	44.7	16.0
IMC8M-2G	8	1/8	4.0	14	16	16.2	18.6	25.7	7.1	33.2	13.8
IMC8M-4G	8	1/4	6.3	19	16	16.2	18.6	31.0	11.2	38.5	18.0
IMC8M-6G	8	3/8	6.3	22	16	16.2	18.6	32.3	11.2	39.8	21.8
IMC8M-8G	8	1/2	6.3	27	16	16.2	18.6	38.1	14.2	45.6	26.0
IMC10M-4G	10	1/4	5.8	19	19	17.2	19.5	31.8	11.2	39.4	18.0
IMC10M-6G	10	3/8	7.9	22	19	17.2	19.5	33.0	11.2	40.6	21.8
IMC10M-8G	10	1/2	7.9	27	19	17.2	19.5	38.9	14.2	46.5	16.0
IMC12M-4G	12	1/4	5.8	22	22	22.8	22.0	32.5	11.2	42.6	18.0
IMC12M-6G	12	3/8	7.9	22	22	22.8	22.0	33.0	11.2	43.1	21.8
IMC12M-8G	12	1/2	9.5	27	22	22.8	22.0	38.9	14.2	49.0	26.0
IMC12M-12G	12	3/4	9.5	35	22	22.8	22.0	42.7	15.2	52.8	32.0
IMC16M-6G	16	3/8	7.9	24	25	24.4	22.0	33.8	11.2	43.9	21.8
IMC16M-8G	16	1/2	11.9	27	25	24.4	22.0	38.9	14.2	49.0	26.0
IMC18M-8G	18	1/2	11.9	27	30	24.4	22.0	38.9	14.2	49.0	26.0
IMC18M-12G	18	3/4	15.1	35	30	24.4	22.0	42.7	15.7	52.8	32.0
IMC20M-8G	20	1/2	11.9	30	32	26.0	22.0	40.4	14.2	50.5	26.0
IMC20M-12G	20	3/4	15.7	35	32	26.0	22.0	42.7	15.7	52.8	32.0
IMC22M-12G	22	3/4	15.7	35	32	26.0	22.0	42.7	15.7	52.8	32.0
IMC22M-16G	22	1	18.3	41	32	26.0	22.0	45.2	18.3	55.3	39.0
IMC25M-12G	25	3/4	15.7	35	38	31.3	26.5	45.2	15.7	57.5	32.0
IMC25M-16G	25	1	19.8	41	38	31.3	26.5	47.8	18.3	60.1	39.0
IMC28M-16G	28	1	19.8	41	46	36.6	36.6	49.3	18.3	70.1	39.0
IMC28M-20G	28	1-1/4	21.8	50	46	36.6	36.6	53.1	19.8	73.9	49.0
IMC32M-20G	32	1-1/4	25.0	50	50	42.0	41.6	55.9	19.8	78.9	49.0
IMC32M-24G	38	1-1/2	31.8	55	60	49.4	47.9	63.2	22.1	90.8	54.7

04 IMC-GB MALE CONNECTOR FOR METAL GASKET SEAL DIN 3852 FORM B

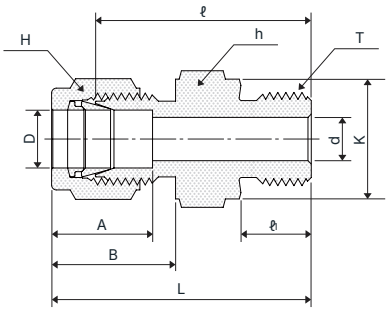

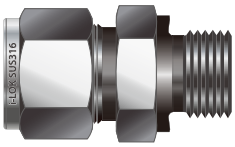

Connects Metric Tube to Female ISO Parallel Thread

Part No.	Tube O.D. D	T G(PF)	d min.	Width across flat		A	B	ℓ	ℓ1	L	K
				h	H						
IMC3M-2GB	3	1/8	2.4	14	12	12.9	15.3	23.4	7.1	30.0	18.0
IMC3M-4GB	3	1/4	2.4	19	12	12.9	15.3	28.7	11.2	35.3	13.8
IMC4M-2GB	4	1/8	2.4	14	12	13.7	16.1	24.1	7.1	30.7	13.8
IMC6M-2GB	6	1/8	4.0	14	14	15.3	17.7	24.9	7.1	32.3	18.0
IMC6M-4GB	6	1/4	4.8	19	14	15.3	17.7	30.2	11.2	37.6	21.8
IMC6M-6GB	6	3/8	4.8	22	14	15.3	17.7	31.5	11.2	38.9	26.0
IMC6M-8GB	6	1/2	4.8	27	14	15.3	17.7	37.3	14.2	44.7	13.8
IMC8M-2GB	8	1/8	4.0	14	16	16.2	18.6	25.7	7.1	33.2	13.8
IMC8M-4GB	8	1/4	5.8	19	16	16.2	18.6	31.0	11.2	38.5	21.8
IMC8M-6GB	8	3/8	6.3	22	16	16.2	18.6	32.3	11.2	39.8	26.0
IMC8M-8GB	8	1/2	6.3	27	16	16.2	18.6	38.1	14.2	45.6	18.0
IMC10M-4GB	10	1/4	5.8	19	19	17.2	19.5	31.8	11.2	39.4	21.8
IMC10M-6GB	10	3/8	7.9	22	19	17.2	19.5	33.0	11.2	40.6	26.0
IMC10M-8GB	10	1/2	7.9	27	19	17.2	19.5	38.9	14.2	46.5	18.0
IMC12M-4GB	12	1/4	5.8	22	22	22.8	22.0	32.5	11.2	42.6	21.8
IMC12M-6GB	12	3/8	7.9	22	22	22.8	22.0	33.0	11.2	43.1	26.0
IMC12M-8GB	12	1/2	9.5	27	22	22.8	22.0	38.9	14.2	49.0	32.0
IMC12M-12GB	12	3/4	9.5	35	22	22.8	22.0	42.7	15.2	52.8	26.0
IMC15M-8GB	15	1/2	11.9	27	25	24.4	22.0	38.9	14.2	49.0	21.8
IMC16M-6GB	16	3/8	7.9	24	25	24.4	22.0	33.8	11.2	43.9	26.0
IMC18M-8GB	18	1/2	11.9	27	30	24.4	22.0	38.9	14.2	49.0	32.0
IMC18M-12GB	18	3/4	15.1	35	30	24.4	22.0	42.7	15.7	52.8	26.0
IMC20M-8GB	20	1/2	11.9	30	32	26.0	22.0	40.4	14.2	50.5	32.0
IMC20M-12GB	20	3/4	15.7	35	32	26.0	22.0	42.7	15.7	52.8	32.0
IMC22M-12GB	22	3/4	15.7	35	32	26.0	22.0	42.7	15.7	52.8	39.0
IMC22M-16GB	22	1	18.3	41	32	26.0	22.0	45.2	18.3	55.3	32.0
IMC25M-12GB	25	3/4	15.7	35	38	31.3	26.5	45.2	15.7	57.5	39.0
IMC25M-16GB	25	1	19.8	41	38	31.3	26.5	47.8	18.3	60.1	39.0
IMC28M-16GB	28	1	19.8	41	46	36.6	36.6	49.3	18.3	70.1	49.0
IMC28M-20GB	28	1-1/4	21.8	50	46	36.6	36.6	53.1	19.8	73.9	49.0
IMC32M-20GB	32	1-1/4	25.0	50	50	42.0	41.6	55.9	19.8	78.9	54.7
IMC32M-24GB	38	1-1/2	31.8	55	60	49.4	47.9	63.2	22.1	90.8	

05 IMCB-N BULKHEAD MALE CONNECTOR

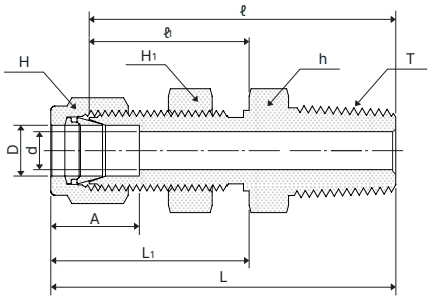

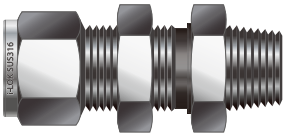

Connects Fractional Tube to Female NPT Thread

Part No.	Tube O.D. D		T NPT	d min.	Width across flat						A	ℓ	ℓ1	L	L1	Panel Hole Drill Size	Panel Max. Thickness
					h		h1		H								
	in	mm			in	mm	in	mm	in	mm							
IMCB2-2N	1/8	3.17	1/8	2.28	1/2	12.70	1/2	12.70	7/16	11.11	12.70	39.87	24.63	46.48	31.24	8.33	12.70
IMCB4-2N	1/4	6.35	1/8	4.82	5/8	15.87	5/8	15.87	9/16	14.28	15.24	42.16	26.16	49.53	33.52	11.50	10.16
IMCB4-4N	1/4	6.35	1/4	4.82	5/8	15.87	5/8	15.87	9/16	14.28	15.24	45.97	26.16	53.34	33.52	11.50	10.16
IMCB6-4N	3/8	9.52	1/4	7.11	3/4	19.05	3/4	19.05	11/16	17.46	16.76	50.03	29.46	57.40	36.83	14.68	11.17
IMCB6-6N	3/8	9.52	3/8	7.11	3/4	19.05	3/4	19.05	11/16	17.46	16.76	50.03	29.46	57.40	36.83	14.68	11.17
IMCB6-8N	3/8	9.52	1/2	7.11	7/8	22.22	3/4	19.05	11/16	17.46	16.76	56.38	29.46	63.75	36.83	14.68	11.17
IMCB8-6N	1/2	12.70	3/8	9.39	15/16	23.81	15/16	23.81	7/8	22.22	22.86	53.08	31.75	63.24	41.91	19.44	12.70
IMCB8-8N	1/2	12.70	1/2	10.41	15/16	23.81	15/16	23.81	7/8	22.22	22.86	58.67	31.75	68.83	41.91	19.44	12.70
IMCB12-12N	3/4	19.05	3/4	15.74	1-3/16	30.16	1-3/16	30.16	1-1/8	28.58	24.38	66.04	37.33	76.20	47.49	25.76	16.76
IMCB16-16N	1	25.40	1	22.35	1-5/8	41.28	1-5/8	41.28	1-1/2	38.10	31.24	81.02	45.21	93.21	57.40	33.73	19.05

Connects Fractional Tube to Female NPT Thread

Part No.	Tube O.D. D		T NPT	d min.	Width across flat				A	B	ℓ	L	L1
					h		H						
	in	mm			in	mm	in	mm					
ILBM 4-2N	1/4	6.35	1/8	4.82	1/2	12.70	9/16	14.28	15.24	17.78	17.27	24.63	16.51
ILBM 4-4N	1/4	6.35	1/4	4.82	1/2	12.70	9/16	14.28	15.24	17.78	17.27	24.63	21.08
ILBM 6-2N	3/8	9.52	1/8	4.82	5/8	15.87	11/16	17.46	16.76	19.30	20.57	27.94	18.28
ILBM 6-4N	3/8	9.52	1/4	7.11	5/8	15.87	11/16	17.46	16.76	19.30	20.57	27.94	22.86
ILBM 6-6N	3/8	9.52	3/8	7.11	13/16	20.64	11/16	17.46	16.76	19.30	21.84	29.21	24.13
ILBM 8-6N	1/2	12.70	3/8	9.65	13/16	20.64	7/8	22.22	22.86	21.84	21.84	32.00	24.13
ILBM 8-8N	1/2	12.70	1/2	10.41	13/16	20.64	7/8	22.22	22.86	21.84	21.84	32.00	28.95
ILBM 12-12N	3/4	19.05	3/4	15.74	1-1/8	38.58	1-1/8	28.58	24.38	21.84	23.87	34.03	30.98
ILBM 16-16N	1	25.40	1	22.35	1-3/8	34.92	1-1/2	38.10	31.24	26.41	28.19	40.38	37.84

06 ILM-N MALE ELBOW

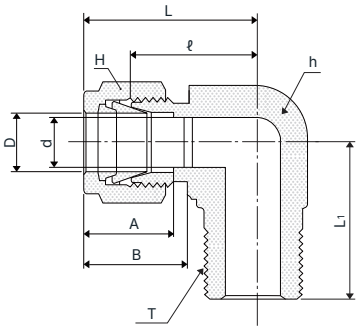



Connects Fractional Tube to Female NPT Thread

Part No.	Tube O.D. D		T NPT	d min.	Width across flat				A	B	ℓ	L	L1
					h		H						
	in	mm			in	mm	in	mm					
ILM2-2N	1/8	3.17	1/8	2.3	1/2	12.70	7/16	11.11	12.70	15.24	18.1	24.7	19.0
ILM2-4N	1/8	3.17	1/4	2.3	1/2	12.70	7/16	11.11	12.70	15.24	18.1	24.7	23.5
ILM3-2N	3/16	4.76	1/8	3	1/2	12.70	1/2	12.70	13.71	16.00	17.8	24.4	18.0
ILM3-4N	3/16	4.76	1/4	3	1/2	12.70	1/2	12.70	13.71	16.00	17.8	24.4	22.5
ILM4-2N	1/4	6.35	1/8	4.8	1/2	12.70	9/16	14.28	15.24	17.78	19.6	26.9	19.0
ILM4-4N	1/4	6.35	1/4	4.8	1/2	12.70	9/16	14.28	15.24	17.78	19.6	26.9	23.5
ILM4-6N	1/4	6.35	3/8	4.8	11/16	17.5	9/16	14.28	15.24	17.78	21.5	28.8	26.2
ILM4-8N	1/4	6.35	1/2	4.8	13/16	20.64	9/16	14.28	15.24	17.78	24.3	31.6	33.0
ILM5-2N	5/16	7.93	1/8	6.4	9/16	14.28	5/8	15.87	16.25	18.54	21.3	28.6	19.9
ILM5-4N	5/16	7.93	1/4	6.4	9/16	14.28	5/8	15.87	16.25	18.54	21.3	28.6	24.5
ILM5-6N	5/16	7.93	3/8	6.4	11/16	17.5	5/8	15.87	16.25	18.54	22.3	29.6	26.2
ILM6-2N	3/8	9.52	1/8	7.1	5/8	15.9	11/16	17.46	16.76	19.30	23.1	30.4	20.9
ILM6-4N	3/8	9.52	1/4	7.1	5/8	15.9	11/16	17.46	16.76	19.30	23.1	30.4	25.4
ILM6-6N	3/8	9.52	3/8	7.1	11/16	17.5	11/16	17.46	16.76	19.30	23.1	30.4	26.2
ILM6-8N	3/8	9.52	1/2	7.1	13/16	20.64	11/16	17.46	16.76	19.30	25.9	33.2	33.0
ILM6-12N	3/8	9.52	3/4	7.1	1-1/16	26.98	11/16	17.46	16.76	19.30	29.7	37.0	36.8
ILM8-4N	1/2	12.70	1/4	10.4	13/16	20.64	7/8	22.22	22.86	21.84	25.9	36.0	28.2
ILM8-6N	1/2	12.70	3/8	10.4	13/16	20.64	7/8	22.22	22.86	21.84	25.9	36.0	28.2
ILM8-8N	1/2	12.70	1/2	10.4	13/16	20.64	7/8	22.22	22.86	21.84	25.9	36.0	33.0
ILM8-12N	1/2	12.70	3/4	10.4	1-1/16	26.98	7/8	22.22	22.86	21.84	29.7	39.8	36.8
ILM10-6N	5/8	15.87	3/8	12.7	15/16	23.8	1	25.40	24.38	21.84	28.7	38.8	30.3
ILM10-8N	5/8	15.87	1/2	12.7	15/16	23.8	1	25.40	24.38	21.84	28.7	38.8	35.1
ILM10-12N	5/8	15.87	3/4	12.7	1-1/16	26.98	1	25.40	24.38	21.84	29.7	39.8	36.8
ILM12-8N	3/4	19.05	1/2	15.7	1-1/16	26.98	1-1/8	28.58	24.38	21.84	29.7	39.8	36.8
ILM12-12N	3/4	19.05	3/4	15.7	1-1/16	26.98	1-1/8	28.58	24.38	21.84	29.7	39.8	36.8
ILM14-12N	7/8	22.22	3/4	18.3	1-3/16	30.2	1-1/4	31.75	25.90	21.84	34.5	44.6	41.6
ILM16-12N	1	25.40	3/4	22.4	1-7/16	36.1	1-1/2	38.10	31.24	26.41	36.8	48.97	41.5
ILM16-16N	1	25.40	1	22.4	1-7/16	36.1	1-1/2	38.10	31.24	26.41	36.8	48.97	16.4
ILM20-20N	1-1/4	31.75	1-1/4	27.7	1-13/16	46	1-7/8	47.63	41.14	38.86	44.5	66.6	51.6
ILM24-24N	1-1/2	38.10	1-1/2	34	2	50.80	2-1/4	57.15	50.03	45.21	50.8	78.0	59.0
ILM32-32N	2	50.80	2	46	2-3/4	69.85	3	76.20	67.56	62.73	69.8	107.1	71.3

07 ILM-R MALE ELBOW

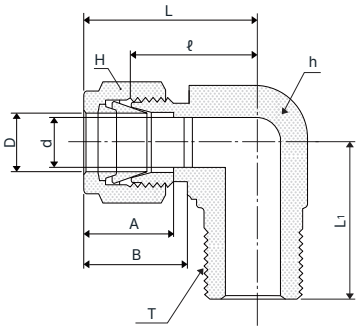



Connects Metric Tube to Female ISO Thread

Part No.	Tube O.D. D	T R(PT)	d min.	Width across flat		A	B	ℓ	L	L1
				h	H					
ILM3M-2R	3	1/8	2.4	12.7	12	12.9	15.3	18.1	24.7	16.6
ILM3M-4R	3	1/4	2.4	12.7	12	12.9	15.3	18.1	24.7	21.1
ILM4M-2R	4	1/8	2.4	12.7	12	13.7	16.1	18.8	25.4	18.7
ILM4M-4R	4	1/4	2.4	12.7	12	13.7	16.1	18.8	25.4	23.5
ILM6M-2R	6	1/8	4.8	12.7	14	15.3	17.7	19.6	26.9	19.0
ILM6M-4R	6	1/4	4.8	12.7	14	15.3	17.7	19.6	26.9	23.5
ILM6M-6R	6	3/8	4.8	17.0	14	15.3	17.7	22.3	29.6	23.5
ILM6M-8R	6	1/2	4.8	20.6	14	15.3	17.7	24.3	31.6	28.3
ILM8M-2R	8	1/8	6.4	14.3	16	16.2	18.6	21.3	28.6	19.9
ILM8M-4R	8	1/4	6.4	14.3	16	16.2	18.6	21.3	28.6	24.4
ILM8M-6R	8	3/8	6.4	17.0	16	16.2	18.6	23.1	30.4	24.4
ILM8M-8R	8	1/2	6.4	20.6	16	16.2	18.6	25.1	32.4	29.2
ILM10M-2R	10	1/8	7.9	17.0	19	17.2	19.5	23.9	31.5	21.7
ILM10M-4R	10	1/4	7.9	17.0	19	17.2	19.5	23.9	31.5	26.2
ILM10M-6R	10	3/8	7.9	17.0	19	17.2	19.5	23.9	31.5	26.2
ILM10M-8R	10	1/2	7.9	20.6	19	17.2	19.5	25.9	33.5	29.2
ILM12M-4R	12	1/4	9.5	20.6	22	22.8	22.0	25.9	36.0	28.2
ILM12M-6R	12	3/8	9.5	20.6	22	22.8	22.0	25.9	36.0	28.2
ILM12M-8R	12	1/2	9.5	20.6	22	22.8	22.0	25.9	36.0	33.0
ILM12M-12R	12	3/4	9.5	27.0	22	22.8	22.0	29.7	39.8	33.0
ILM15M-6R	15	3/8	11.9	24.0	25	24.4	22.0	28.7	38.8	31.0
ILM15M-8R	15	1/2	11.9	24.0	25	24.4	22.0	28.7	38.8	35.8
ILM16M-6R	16	3/8	12.7	24.0	25	24.4	22.0	28.7	38.8	31.0
ILM16M-8R	16	1/2	12.7	24.0	25	24.4	22.0	28.7	38.8	35.8
ILM16M-12R	16	3/4	12.7	24.0	25	24.4	22.0	28.7	38.8	35.8
ILM18M-8R	18	1/2	15.1	27.0	30	24.4	22.0	29.7	39.8	36.8
ILM18M-12R	18	3/4	15.1	27.0	30	24.4	22.0	29.7	39.8	36.8
ILM20M-8R	20	1/2	15.9	36.0	32	26.0	22.0	34.4	44.5	39.6
ILM20M-12R	20	3/4	15.9	36.0	32	26.0	22.0	34.4	44.5	39.6
ILM22M-8R	22	1/2	18.3	36.0	32	26.0	22.0	34.4	44.5	39.6
ILM22M-12R	22	3/4	18.3	36.0	32	26.0	22.0	34.4	44.5	39.6
ILM22M-16R	22	1	18.3	36.0	32	26.0	22.0	34.4	44.5	44.5
ILM25M-12R	25	3/4	21.8	36.0	38	31.3	26.5	36.8	49.0	41.5
ILM25M-16R	25	1	21.8	36.0	38	31.3	26.5	36.8	49.0	46.4
ILM28M-16R	28	1	24.0	41.0	46	40.0	36.6	44.7	65.6	52.8
ILM30M-20R	30	1-1/4	26.2	46.0	46	41.4	38.8	45.7	67.7	52.8
ILM38M-20R	38	1-1/4	33.7	55.0	60	49.4	47.9	56.4	84.0	60.0

08 ITRM-N MALE RUN TEE

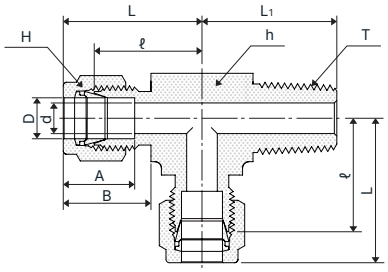

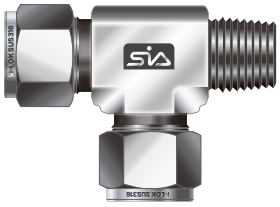

Connects Fractional Tube to Female NPT Thread

Part No.	Tube O.D. D		T NPT	d min.	Width across flat				A	B	ℓ	L	L1
					h		H						
	in	mm			in	mm	in	mm					
ITRM2-2N	1/8	3.17	1/8	2.3	1/2	12.70	7/16	11.11	12.70	15.24	18.1	24.7	19.0
ITRM2-4N	1/8	3.17	1/4	2.3	1/2	12.70	7/16	11.11	12.70	15.24	18.1	24.7	23.5
ITRM3-2N	3/16	4.76	1/8	3	1/2	12.70	1/2	12.70	13.71	16.00	17.8	24.4	18.0
ITRM3-4N	3/16	4.76	1/4	3	1/2	12.70	1/2	12.70	13.71	16.00	17.8	24.4	22.5
ITRM4-2N	1/4	6.35	1/8	4.8	1/2	12.70	9/16	14.28	15.24	17.78	19.6	26.9	19.0
ITRM4-4N	1/4	6.35	1/4	4.8	1/2	12.70	9/16	14.28	15.24	17.78	19.6	26.9	23.5
ITRM4-6N	1/4	6.35	3/8	4.8	11/16	17.5	9/16	14.28	15.24	17.78	21.5	28.8	26.2
ITRM4-8N	1/4	6.35	1/2	4.8	13/16	20.64	9/16	14.28	15.24	17.78	24.3	31.6	33.0
ITRM5-2N	5/16	7.93	1/8	6.4	9/16	14.28	5/8	15.87	16.25	18.54	21.3	28.6	19.9
ITRM5-4N	5/16	7.93	1/4	6.4	9/16	14.28	5/8	15.87	16.25	18.54	21.3	28.6	24.5
ITRM5-6N	5/16	7.93	3/8	6.4	11/16	17.5	5/8	15.87	16.25	18.54	22.3	29.6	26.2
ITRM6-2N	3/8	9.52	1/8	7.1	5/8	15.9	11/16	17.46	16.76	19.30	23.1	30.4	20.9
ITRM6-4N	3/8	9.52	1/4	7.1	5/8	15.9	11/16	17.46	16.76	19.30	23.1	30.4	25.4
ITRM6-6N	3/8	9.52	3/8	7.1	11/16	17.5	11/16	17.46	16.76	19.30	23.1	30.4	26.2
ITRM6-8N	3/8	9.52	1/2	7.1	13/16	20.64	11/16	17.46	16.76	19.30	25.9	33.2	33.0
ITRM6-12N	3/8	9.52	3/4	7.1	1-1/16	26.98	11/16	17.46	16.76	19.30	29.7	37.0	36.8
ITRM8-4N	1/2	12.70	1/4	10.4	13/16	20.64	7/8	22.22	22.86	21.84	25.9	36.0	28.2
ITRM8-6N	1/2	12.70	3/8	10.4	13/16	20.64	7/8	22.22	22.86	21.84	25.9	36.0	28.2
ITRM8-8N	1/2	12.70	1/2	10.4	13/16	20.64	7/8	22.22	22.86	21.84	25.9	36.0	33.0
ITRM8-12N	1/2	12.70	3/4	10.4	1-1/16	26.98	7/8	22.22	22.86	21.84	29.7	39.8	36.8
ITRM10-6N	5/8	15.87	3/8	12.7	15/16	23.8	1	25.40	24.38	21.84	28.7	38.8	30.3
ITRM10-8N	5/8	15.87	1/2	12.7	15/16	23.8	1	25.40	24.38	21.84	28.7	38.8	35.1
ITRM10-12N	5/8	15.87	3/4	12.7	1-1/16	26.98	1	25.40	24.38	21.84	29.7	39.8	36.8
ITRM12-8N	3/4	19.05	1/2	15.7	1-1/16	26.98	1-1/8	28.58	24.38	21.84	29.7	39.8	36.8
ITRM12-12N	3/4	19.05	3/4	15.7	1-1/16	26.98	1-1/8	28.58	24.38	21.84	29.7	39.8	36.8
ITRM14-12N	7/8	22.22	3/4	18.3	1-3/16	30.2	1-1/4	31.75	25.90	21.84	34.5	44.6	41.6
ITRM16-12N	1	25.40	3/4	22.4	1-7/16	36.1	1-1/2	38.10	31.24	26.41	36.8	48.97	41.5
ITRM16-16N	1	25.40	1	22.4	1-7/16	36.1	1-1/2	38.10	31.24	26.41	36.8	48.97	46.4
ITRM20-20N	1-1/4	31.75	1-1/4	27.7	1-13/16	46	1-7/8	47.63	41.14	38.86	44.5	66.6	51.6
ITRM24-24N	1-1/2	38.10	1-1/2	34	2	50.80	2-1/4	57.15	50.03	45.21	50.8	78.0	59.0
ITRM32-32N	2	50.80	2	46	2-3/4	69.85	3	76.20	67.56	62.73	69.8	107.1	71.3

09 ITRM-R MALE RUN TEE

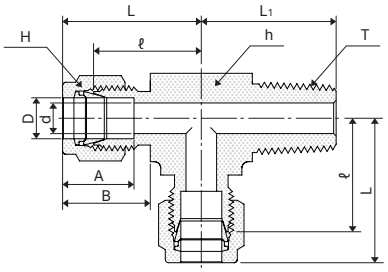



Connects Metric Tube to Female ISO Thread

Part No.	Tube O.D. D	T R(PT)	d min.	Width across flat		A	B	ℓ	L	L1
				h	H					
ITRM3M-2R	3	1/8	2.4	12.7	12	12.9	15.3	18.1	24.7	16.6
ITRM3M-4R	3	1/4	2.4	12.7	12	12.9	15.3	18.1	24.7	21.1
ITRM4M-2R	4	1/8	2.4	12.7	12	13.7	16.1	18.8	25.4	18.7
ITRM4M-4R	4	1/4	2.4	12.7	12	13.7	16.1	18.8	25.4	23.5
ITRM6M-2R	6	1/8	4.8	12.7	14	15.3	17.7	19.6	26.9	19.0
ITRM6M-4R	6	1/4	4.8	12.7	14	15.3	17.7	19.6	26.9	23.5
ITRM6M-6R	6	3/8	4.8	17.0	14	15.3	17.7	22.3	29.6	23.5
ITRM6M-8R	6	1/2	4.8	20.6	14	15.3	17.7	24.3	31.6	28.3
ITRM8M-2R	8	1/8	6.4	14.3	16	16.2	18.6	21.3	28.6	19.9
ITRM8M-4R	8	1/4	6.4	14.3	16	16.2	18.6	21.3	28.6	24.4
ITRM8M-6R	8	3/8	6.4	17.0	16	16.2	18.6	23.1	30.4	24.4
ITRM8M-8R	8	1/2	6.4	20.6	16	16.2	18.6	25.1	32.4	29.2
ITRM10M-2R	10	1/8	7.9	17.0	19	17.2	19.5	23.9	31.5	21.7
ITRM10M-4R	10	1/4	7.9	17.0	19	17.2	19.5	23.9	31.5	26.2
ITRM10M-6R	10	3/8	7.9	17.0	19	17.2	19.5	23.9	31.5	26.2
ITRM10M-8R	10	1/2	7.9	20.6	19	17.2	19.5	25.9	33.5	29.2
ITRM12M-4R	12	1/4	9.5	20.6	22	22.8	22.0	25.9	36.0	28.2
ITRM12M-6R	12	3/8	9.5	20.6	22	22.8	22.0	25.9	36.0	28.2
ITRM12M-8R	12	1/2	9.5	20.6	22	22.8	22.0	25.9	36.0	33.0
ITRM12M-12R	12	3/4	9.5	27.0	22	22.8	22.0	29.7	39.8	33.0
ITRM15M-6R	15	3/8	11.9	24.0	25	24.4	22.0	28.7	38.8	31.0
ITRM15M-8R	15	1/2	11.9	24.0	25	24.4	22.0	28.7	38.8	35.8
ITRM16M-6R	16	3/8	12.7	24.0	25	24.4	22.0	28.7	38.8	31.0
ITRM16M-8R	16	1/2	12.7	24.0	25	24.4	22.0	28.7	38.8	35.8
ITRM16M-12R	16	3/4	12.7	24.0	25	24.4	22.0	28.7	38.8	35.8
ITRM18M-8R	18	1/2	15.1	27.0	30	24.4	22.0	29.7	39.8	36.8
ITRM18M-12R	18	3/4	15.1	27.0	30	24.4	22.0	29.7	39.8	36.8
ITRM20M-8R	20	1/2	15.9	36.0	32	26.0	22.0	34.4	44.5	39.6
ITRM20M-12R	20	3/4	15.9	36.0	32	26.0	22.0	34.4	44.5	39.6
ITRM22M-8R	22	1/2	18.3	36.0	32	26.0	22.0	34.4	44.5	39.6
ITRM22M-12R	22	3/4	18.3	36.0	32	26.0	22.0	34.4	44.5	39.6
ITRM22M-16R	22	1	18.3	36.0	32	26.0	22.0	34.4	44.5	44.5
ITRM25M-12R	25	3/4	21.8	36.0	38	31.3	26.5	36.8	49.0	41.5
ITRM25M-16R	25	1	21.8	36.0	38	31.3	26.5	36.8	49.0	46.4
ITRM28M-16R	28	1	24.0	41.0	46	40.0	36.6	44.7	65.6	52.8
ITRM30M-20R	30	1-1/4	26.2	46.0	46	41.4	38.8	45.7	67.7	52.8
ITRM38M-20R	38	1-1/4	33.7	55.0	60	49.4	47.9	56.4	84.0	60.0

10 ITBM-N MALE BRANCH TEE

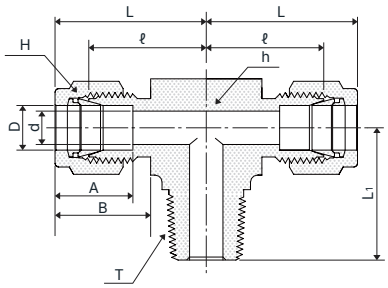



Connects Fractional Tube to Female NPT Thread

Part No.	Tube O.D. D		T NPT	d min.	Width across flat				A	B	ℓ	L	L1
					h		H						
	in	mm			in	mm	in	mm					
ITBM2-2N	1/8	3.17	1/8	2.28	1/2	12.70	7/16	11.11	12.70	15.24	18.10	24.70	19.0
ITBM2-4N	1/8	3.17	1/4	2.28	1/2	12.70	7/16	11.11	12.70	15.24	18.10	24.70	23.5
ITBM4-2N	1/4	6.35	1/8	4.82	1/2	12.70	9/16	14.28	15.24	17.78	19.60	26.90	19.0
ITBM4-4N	1/4	6.35	1/4	4.82	1/2	12.70	9/16	14.28	15.24	17.78	19.60	26.90	23.50
ITBM4-6N	1/4	6.35	3/8	4.82	11/16	17.5	9/16	14.28	15.24	17.78	21.50	28.80	26.20
ITBM4-8N	1/4	6.35	1/2	4.82	7/8	22.22	9/16	14.28	15.24	17.78	24.30	31.60	33.0
ITBM5-2N	5/16	7.93	1/8	6.4	9/16	14.28	5/8	15.87	16.25	18.54	21.30	28.60	19.90
ITBM5-4N	5/16	7.93	1/4	6.4	9/16	14.28	5/8	15.87	16.25	18.54	21.30	28.60	24.50
ITBM5-6N	5/16	7.93	3/8	6.4	11/16	17.5	5/8	15.87	16.25	18.54	22.30	29.60	26.20
ITBM6-2N	3/8	9.52	1/8	7.11	5/8	15.9	11/16	17.46	16.76	19.30	23.10	30.40	20.90
ITBM6-4N	3/8	9.52	1/4	7.11	5/8	15.9	11/16	17.46	16.76	19.30	23.10	30.40	25.40
ITBM6-6N	3/8	9.52	3/8	7.11	11/16	17.5	11/16	17.46	16.76	19.30	23.87	31.24	26.20
ITBM6-8N	3/8	9.52	1/2	7.11	7/8	22.22	11/16	17.46	16.76	19.30	25.90	33.20	33.0
ITBM6-12N	3/8	9.52	3/4	7.11	1-1/16	26.98	11/16	17.46	16.76	19.30	29.70	37.0	36.80
ITBM8-4N	1/2	12.70	1/4	10.4	13/16	20.64	7/8	22.22	22.86	21.84	25.90	36.0	28.20
ITBM8-6N	1/2	12.70	3/8	10.4	13/16	20.64	7/8	22.22	22.86	21.84	25.90	36.0	28.20
ITBM8-8N	1/2	12.70	1/2	10.41	7/8	22.22	7/8	22.22	22.86	21.84	25.90	36.0	33.0
ITBM8-12N	1/2	12.70	3/4	10.41	1-1/16	26.98	7/8	22.22	22.86	21.84	29.70	39.80	36.80
ITBM10-6N	5/8	15.87	3/8	12.70	15/16	23.8	1	25.40	24.38	21.84	28.70	38.80	30.30
ITBM10-8N	5/8	15.87	1/2	12.70	15/16	23.8	1	25.40	24.38	21.84	28.70	38.80	35.10
ITBM10-12N	5/8	15.87	3/4	12.70	1-1/16	26.98	1	25.40	24.38	21.84	29.70	39.80	36.80
ITBM12-8N	3/4	19.05	1/2	15.74	1-1/16	26.98	1-1/8	28.58	24.38	21.84	29.70	39.80	36.80
ITBM12-12N	3/4	19.05	3/4	15.74	1-1/16	26.98	1-1/8	28.58	24.38	21.84	29.70	39.80	36.80
ITBM14-12N	7/8	22.22	3/4	18.30	1-3/16	30.2	1-1/4	31.75	25.90	21.84	34.50	44.60	41.60
ITBM16-12N	1	25.40	3/4	22.40	1-7/16	36.1	1-1/2	38.10	31.24	26.41	36.80	48.97	41.50
ITBM16-16N	1	25.40	1	22.35	1-7/16	36.1	1-1/2	38.10	31.24	26.41	36.80	48.97	46.40
ITBM20-20N	1-1/4	31.75	1-1/4	27.68	1-13/16	46	1-7/8	47.63	41.14	38.86	44.50	66.60	51.60
ITBM24-24N	1-1/2	38.10	1-1/2	34.03	2	50.80	2-1/4	57.15	50.03	45.21	50.80	78.0	59.0
ITBM32-32N	2	50.80	2	45.97	2-3/4	69.85	3	76.20	62.73	62.73	69.80	107.100	71.30

11 ITBM-R MALE BRANCH TEE

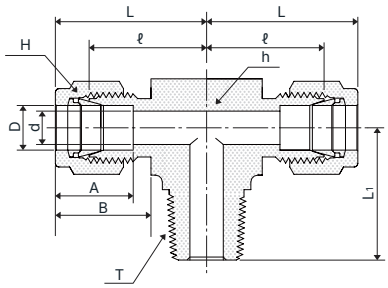



Connects Metric Tube to Female ISO Thread

Part No.	Tube O.D. D	T R(PT)	d min.	Width across flat		A	B	ℓ	L	L1
				h	H					
ITBM3M-2R	3	1/8	2.4	12.7	12	12.9	15.3	18.1	24.7	16.6
ITBM3M-4R	3	1/4	2.4	12.7	12	12.9	15.3	18.1	24.7	21.1
ITBM4M-2R	4	1/8	2.4	12.7	12	13.7	16.1	18.8	25.4	18.7
ITBM4M-4R	4	1/4	2.4	12.7	12	13.7	16.1	18.8	25.4	23.5
ITBM6M-2R	6	1/8	4.8	12.7	14	15.3	17.7	19.6	26.9	19.0
ITBM6M-4R	6	1/4	4.8	12.7	14	15.3	17.7	19.6	26.9	23.5
ITBM6M-6R	6	3/8	4.8	17.0	14	15.3	17.7	22.3	29.6	23.5
ITBM6M-8R	6	1/2	4.8	20.6	14	15.3	17.7	24.3	31.6	28.3
ITBM8M-2R	8	1/8	6.4	14.3	16	16.2	18.6	21.3	28.6	19.9
ITBM8M-4R	8	1/4	6.4	14.3	16	16.2	18.6	21.3	28.6	24.4
ITBM8M-6R	8	3/8	6.4	17.0	16	16.2	18.6	23.1	30.4	24.4
ITBM8M-8R	8	1/2	6.4	20.6	16	16.2	18.6	25.1	32.4	29.2
ITBM10M-2R	10	1/8	7.9	17.0	19	17.2	19.5	23.9	31.5	21.7
ITBM10M-4R	10	1/4	7.9	17.0	19	17.2	19.5	23.9	31.5	26.2
ITBM10M-6R	10	3/8	7.9	17.0	19	17.2	19.5	23.9	31.5	26.2
ITBM10M-8R	10	1/2	7.9	20.6	19	17.2	19.5	25.9	33.5	29.2
ITBM12M-4R	12	1/4	9.5	20.6	22	22.8	22.0	25.9	36.0	28.2
ITBM12M-6R	12	3/8	9.5	20.6	22	22.8	22.0	25.9	36.0	28.2
ITBM12M-8R	12	1/2	9.5	20.6	22	22.8	22.0	25.9	36.0	33.0
ITBM12M-12R	12	3/4	9.5	27.0	22	22.8	22.0	29.7	39.8	33.0
ITBM15M-6R	15	3/8	11.9	24.0	25	24.4	22.0	28.7	38.8	31.0
ITBM15M-8R	15	1/2	11.9	24.0	25	24.4	22.0	28.7	38.8	35.8
ITBM16M-6R	16	3/8	12.7	24.0	25	24.4	22.0	28.7	38.8	31.0
ITBM16M-8R	16	1/2	12.7	24.0	25	24.4	22.0	28.7	38.8	35.8
ITBM16M-12R	16	3/4	12.7	24.0	25	24.4	22.0	28.7	38.8	35.8
ITBM18M-8R	18	1/2	15.1	27.0	30	24.4	22.0	29.7	39.8	36.8
ITBM18M-12R	18	3/4	15.1	27.0	30	24.4	22.0	29.7	39.8	36.8
ITBM20M-8R	20	1/2	15.9	36.0	32	26.0	22.0	34.4	44.5	39.6
ITBM20M-12R	20	3/4	15.9	36.0	32	26.0	22.0	34.4	44.5	39.6
ITBM22M-8R	22	1/2	18.3	36.0	32	26.0	22.0	34.4	44.5	39.6
ITBM22M-12R	22	3/4	18.3	36.0	32	26.0	22.0	34.4	44.5	39.6
ITBM22M-16R	22	1	18.3	36.0	32	26.0	22.0	34.4	44.5	44.5
ITBM25M-12R	25	3/4	21.8	36.0	38	31.3	26.5	36.8	49.0	41.5
ITBM25M-16R	25	1	21.8	36.0	38	31.3	26.5	36.8	49.0	46.4
ITBM28M-16R	28	1	24.0	41.0	46	40.0	36.6	44.7	65.6	52.8
ITBM30M-20R	30	1-1/4	26.2	46.0	46	41.4	38.8	45.7	67.7	52.8
ITBM38M-20R	38	1-1/4	33.7	55.0	60	49.4	47.9	56.4	84.0	60.0

12 ICF-N FEMALE CONNECTOR

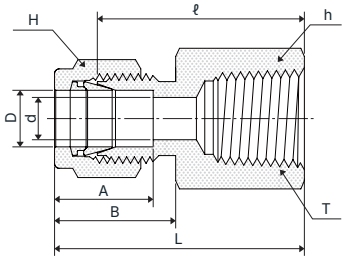

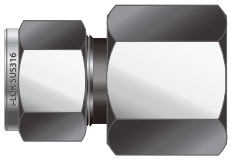

Connects Fractional Tube to Male NPT Thread

Part No.	Tube O.D. D		T NPT	d min.	Width across flat				A	B	ℓ	L
					h		H					
	in	mm			in	mm	in	mm				
ICF1-1N	1/16	1.59	1/16	1.27	7/16	11.11	5/16	7.93	8.63	10.92	19.81	23.62
ICF1-2N	1/16	1.59	1/8	1.27	9/16	14.28	5/16	7.93	8.63	10.92	20.57	24.38
ICF2-2N	1/8	3.17	1/8	2.28	9/16	14.28	7/16	11.11	12.70	15.24	22.09	28.70
ICF2-4N	1/8	3.17	1/4	2.28	3/4	19.05	7/16	11.11	12.70	15.24	26.92	33.52
ICF3-2N	3/16	4.76	1/8	3.04	9/16	14.28	1/2	12.70	13.71	16.00	23.11	29.71
ICF4-2N	1/4	6.35	1/8	4.82	9/16	14.28	9/16	14.28	15.24	17.78	23.87	31.24
ICF4-4N	1/4	6.35	1/4	4.82	3/4	19.05	9/16	14.28	15.24	17.78	28.44	35.81
ICF4-6N	1/4	6.35	3/8	4.82	7/8	22.22	9/16	14.28	15.24	17.78	30.22	37.59
ICF4-8N	1/4	6.35	1/2	4.82	1-1/16	26.98	9/16	14.28	15.24	17.78	35.05	42.41
ICF5-2N	5/16	7.93	1/8	6.35	9/16	14.28	5/8	15.87	16.25	18.54	24.63	32.00
ICF5-4N	5/16	7.93	1/4	6.35	3/4	19.05	5/8	15.87	16.25	18.54	29.46	36.83
ICF6-2N	3/8	9.52	1/8	7.11	5/8	15.87	11/16	17.46	16.76	19.30	25.40	32.76
ICF6-4N	3/8	9.52	1/4	7.11	3/4	19.05	11/16	17.46	16.76	19.30	30.22	37.59
ICF6-6N	3/8	9.52	3/8	7.11	7/8	22.22	11/16	17.46	16.76	19.30	31.75	39.11
ICF6-8N	3/8	9.52	1/2	7.11	1-1/16	26.98	11/16	17.46	16.76	19.30	36.57	43.94
ICF6-12N	3/8	9.52	3/4	7.11	1-5/16	33.33	11/16	17.46	16.76	19.30	40.38	47.45
ICF8-4N	1/2	12.70	1/4	10.41	13/16	20.64	7/8	22.22	22.86	21.84	30.22	40.38
ICF8-6N	1/2	12.70	3/8	10.41	7/8	22.22	7/8	22.22	22.86	21.84	31.75	41.91
ICF8-8N	1/2	12.70	1/2	10.41	1-1/16	26.98	7/8	22.22	22.86	21.84	36.57	46.73
ICF8-12N	1/2	12.70	3/4	10.41	1-5/16	33.33	7/8	22.22	22.86	21.84	38.10	48.26
ICF10-6N	5/8	15.87	3/8	12.70	15/16	23.81	1	25.40	24.38	21.84	31.75	41.91
ICF10-8N	5/8	15.87	1/2	12.70	1-1/16	26.98	1	25.40	24.38	21.84	36.57	46.73
ICF10-12N	5/8	15.87	3/4	12.70	1-5/16	33.33	1	25.40	24.38	21.84	38.10	48.26
ICF12-8N	3/4	19.05	1/2	15.74	1-1/16	26.98	1-1/8	28.58	24.38	21.84	36.57	46.73
ICF12-12N	3/4	19.05	3/4	15.74	1-5/16	33.33	1-1/8	28.58	24.38	21.84	38.10	48.26
ICF14-12N	7/8	22.22	3/4	18.28	1-5/16	33.33	1-1/4	31.75	25.90	21.84	39.62	49.78
ICF16-12N	1	25.40	3/4	22.35	1-3/8	34.92	1-1/2	38.10	31.24	26.41	41.14	53.34
ICF16-16N	1	25.40	1	22.35	1-5/8	41.27	1-1/2	38.10	31.24	26.41	50.03	62.23
ICF20-20N	1-1/4	31.75	1-1/4	27.68	2-1/8	53.98	1-7/8	47.63	41.14	38.86	52.57	74.67
ICF24-24N	1-1/2	38.10	1-1/2	34.03	2-3/8	60.33	2-1/4	57.15	50.03	45.21	56.13	83.81
ICF32-32N	2	50.80	2	45.97	2-1/8	73.03	3	76.20	67.56	62.73	64.26	101.60

13 ICF-R FEMALE CONNECTOR

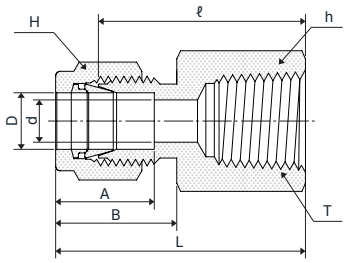

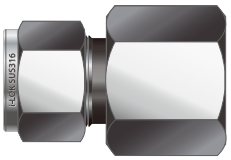

Connects Metric Tube to Male ISO Tapered Thread

Part No.	Tube O.D. D	T R(PT)	d min.	Width across flat		A	B	ℓ	L
				h	H				
ICF3M-2R	3	1/8	2.4	14	12	12.9	15.3	22.1	28.7
ICF3M-4R	3	1/4	2.4	19	12	12.9	15.3	26.9	33.5
ICF4M-2R	4	1/8	2.4	14	12	13.7	16.1	23.1	29.7
ICF6M-2R	6	1/8	4.8	14	14	15.3	17.7	23.9	31.3
ICF6M-4R	6	1/4	4.8	19	14	15.3	17.7	28.4	35.8
ICF6M-6R	6	3/8	4.8	22	14	15.3	17.7	29.5	36.9
ICF6M-8R	6	1/2	4.8	27	14	15.3	17.7	35.1	42.5
ICF8M-2R	8	1/8	6.3	14	16	16.2	18.6	24.6	32.1
ICF8M-4R	8	1/4	6.3	19	16	16.2	18.6	29.5	37.0
ICF8M-6R	8	3/8	6.3	22	16	16.2	18.6	30.2	37.7
ICF8M-8R	8	1/2	6.3	27	16	16.2	18.6	35.8	43.3
ICF10M-2R	10	1/8	7.9	18	19	17.2	19.5	25.4	33.0
ICF10M-4R	10	1/4	7.9	19	19	17.2	19.5	30.2	37.8
ICF10M-6R	10	3/8	7.9	22	19	17.2	19.5	31.0	38.6
ICF10M-8R	10	1/2	7.9	27	19	17.2	19.5	36.6	44.2
ICF12M-2R	12	1/8	9.5	22	22	22.8	22.0	28.4	38.5
ICF12M-4R	12	1/4	9.5	22	22	22.8	22.0	30.2	40.3
ICF12M-6R	12	3/8	9.5	22	22	22.8	22.0	31.0	41.1
ICF12M-8R	12	1/2	9.5	27	22	22.8	22.0	36.6	46.7
ICF12M-12R	12	3/4	9.5	35	22	22.8	22.0	38.9	49.0
ICF15M-8R	15	1/2	11.9	27	25	24.4	22.0	36.6	46.7
ICF16M-8R	16	1/2	12.7	27	25	24.4	22.0	36.8	46.9
ICF20M-8R	20	1/2	15.9	30	32	26.0	22.0	37.8	47.9
ICF20M-12R	20	3/4	15.9	35	32	26.0	22.0	39.6	49.7
ICF22M-12R	22	3/4	18.3	35	32	26.0	22.0	39.6	49.7
ICF22M-16R	22	1	18.3	41	32	26.0	22.0	47.8	57.9
ICF25M-12R	25	3/4	21.8	35	38	31.3	26.5	41.1	53.4
ICF25M-16R	25	1	21.8	41	38	31.3	26.5	50.0	62.3

14 IGC-G FEMALE GAUGE CONNECTOR

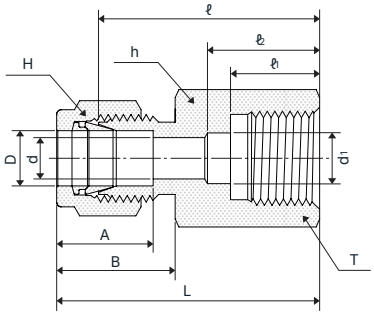

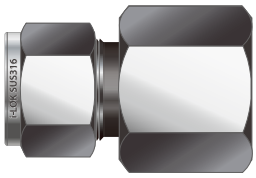

Connects Fractional Tube to ISO Parallel Thread (Gauge)

Part No.	Tube O.D. D		T (PF)	d min.	d_1 min.	Width across flat				A	B	ℓ	ℓ1	ℓ2	L
						h		H							
	in	mm				in	mm	in	mm						
IGC4-2G	1/4	6.35	1/8	4.82	-	9/16	14.28	9/16	14.28	15.24	17.78	24.30	10.0	-	31.55
IGC4-4G	1/4	6.35	1/4	4.82	5.58	3/4	19.05	9/16	14.28	15.24	17.78	30.22	13.0	17.0	37.59
IGC4-6G	1/4	6.35	3/8	4.82	6.50	15/16	23.81	9/16	14.28	15.24	17.78	30.22	14.10	17.0	37.59
IGC4-8G	1/4	6.35	1/2	4.82	6.50	1-1/16	26.98	9/16	14.28	15.24	17.78	36.07	18.80	23.0	43.43
IGC5-4G	5/16	7.93	1/4	5.58	-	3/4	19.05	5/8	15.87	16.25	18.54	30.98	13.0	-	38.35
IGC5-8G	5/16	7.93	1/2	6.30	-	1-1/16	26.98	5/8	15.87	16.25	18.54	33.02	19.0	-	40.38
IGC6-4G	3/8	9.52	1/4	5.58	-	3/4	19.05	11/16	17.46	16.76	19.30	31.75	12.95	-	39.12
IGC6-6G	3/8	9.52	3/8	6.50	-	15/16	23.81	11/16	17.46	16.76	19.30	31.24	14.0	-	38.61
IGC6-8G	3/8	9.52	1/2	7.11	-	1-1/16	26.98	11/16	17.46	16.76	19.30	34.54	18.80	-	41.91
IGC8-4G	1/2	12.70	1/4	5.50	-	13/16	20.74	7/8	22.22	22.86	21.84	31.80	12.90	-	41.95
IGC8-6G	1/2	12.70	3/8	6.50	-	15/16	23.81	7/8	22.22	22.86	21.84	34.29	14.24	-	44.45
IGC8-8G	1/2	12.70	1/2	7.11	-	1-1/16	26.98	7/8	22.22	22.86	21.84	38.10	18.80	-	48.26

Connects Metric Tube to Male ISO Parallel Thread (Gauge)

Part No.	Tube O.D. D	T (PF)	d min.	d_1 min.	Width across flat		A	B	ℓ	ℓ1	ℓ2	L
					h	H						
IGC3M-4G	3	1/4	2.4	5.5	19	12	12.9	15.3	28.7	12.9	17	35.3
IGC6M-4G	6	1/4	4.8	5.5	19	14	15.3	17.7	30.2	12.9	17	37.6
IGC6M-6G	6	3/8	4.8	6.5	24	14	15.3	17.7	30.2	14.0	17	37.6
IGC6M-8G	6	1/2	4.8	7.0	27	14	15.3	17.7	36.3	18.8	23	43.0
IGC8M-4G	8	1/4	5.5	-	19	16	16.2	18.6	31.0	12.9	-	38.5
IGC8M-6G	8	3/8	6.3	-	24	16	16.2	18.6	28.7	14.0	-	36.2
IGC8M-8G	8	1/2	6.3	-	27	16	16.2	18.6	33.5	18.8	-	41.0
IGC10M-4G	10	1/4	5.5	-	19	19	17.2	19.5	31.8	12.9	-	39.4
IGC10M-6G	10	3/8	6.5	-	24	19	17.2	19.5	31.2	14.0	-	38.8
IGC10M-8G	10	1/2	7.0	-	27	19	17.2	19.5	34.5	18.8	-	41.4
IGC12M-4G	12	1/4	5.5	-	22	22	22.8	22.0	31.8	12.9	-	41.9
IGC12M-6G	12	3/8	6.5	-	24	22	22.8	22.0	34.3	14.0	-	44.4
IGC12M-8G	12	1/2	7.0	-	27	22	22.8	22.0	38.1	18.8	-	48.2
IGC20M-8G	20	1/2	7.0	-	30	32	26.0	22.0	44.2	18.8	-	54.3
IGC22M-8G	22	1/2	7.0	-	30	32	26.0	22.0	44.2	18.8	-	54.3

15 ICBF-N BULKHEAD FEMALE CONNECTOR

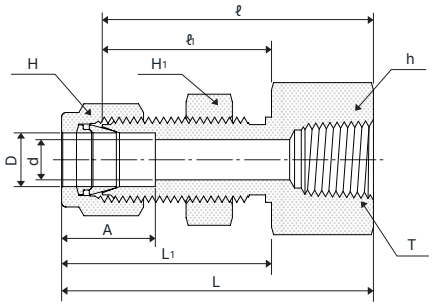

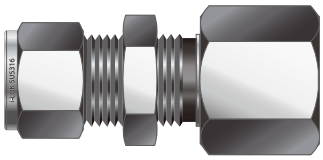

Connects Fractional Tube to Male NPT Thread

Part No.	Tube O.D. D		T NPT	d min.	Width across flat						A	ℓ	ℓ1	L	L1	Panel Hole Drill Size	Panel Max. Thickness
					h		h1		H								
	in	mm			in	mm	in	mm	in	mm							
ICBF2-2N	1/8	3.17	1/8	2.28	9/16	14.28	1/2	12.70	7/16	11.11	12.70	38.10	24.63	44.70	31.24	8.33	12.70
ICBF4-2N	1/4	6.35	1/8	4.82	5/8	15.87	5/8	15.87	9/16	14.28	15.24	39.62	26.16	46.99	33.52	11.50	10.16
ICBF4-4N	1/4	6.35	1/4	4.82	3/4	19.05	5/5	15.87	9/16	14.28	15.24	44.45	26.16	51.81	33.52	11.50	10.16
ICBF6-4N	3/8	9.52	1/4	7.11	3/4	19.05	3/4	19.05	11/16	17.46	16.76	47.75	29.46	55.11	36.83	14.68	11.17
ICBF8-6N	1/2	12.70	3/8	10.41	15/16	23.81	15/16	23.81	7/8	22.22	22.86	51.56	31.75	61.72	41.91	19.44	12.70
ICBF8-8N	1/2	12.70	1/2	10.41	1-1/16	26.98	15/16	23.81	7/8	22.22	22.86	56.38	31.75	66.54	41.91	19.44	12.70
ICBF12-12N	3/4	19.05	3/4	15.74	1-5/16	33.33	1-3/16	30.16	1-1/8	28.57	24.38	63.60	38.30	73.51	47.21	25.79	16.76

Connects Metric Tube to Male NPT Thread

Part No.	Tube O.D. D	T NPT	d min.	Width across flat			A	ℓ	ℓ1	L	L1	Panel Hole Drill Size	Panel Max. Thickness
				h	h1	H							
ICBF6M-2N	6	1/8	4.8	16	15.8	14	15.3	39.6	26.2	46.90	35.00	11.5	10.2
ICBF6M-4N	6	1/4	4.8	19.0	16.0	14	15.3	44.4	26.2	51.80	33.60	11.5	10.2
ICBF8M-4N	8	1/4	6.3	19.0	17.4	16	16.2	46.7	28.6	53.85	35.55	13.1	11.2
ICBF12M-8N	12	1/2	9.5	27.0	24.0	22	22.8	56.4	31.8	66.50	41.90	19.5	12.7

16 ILF-N FEMALE ELBOW

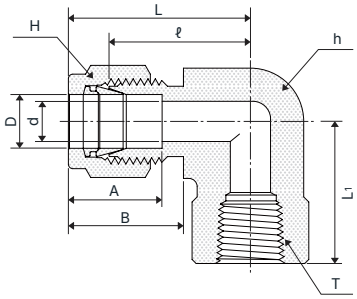



Connects Fractional Tube to Male NPT Thread

Part No.	Tube O.D. D		T NPT	d min.	Width across flat				A	B	ℓ	L	L1
					h		H						
	in	mm			in	mm	in	mm					
ILF2-2N	1/8	3.17	1/8	2.28	1/2	12.70	7/16	11.11	12.70	15.24	18.1	24.7	19.1
ILF2-4N	1/8	3.17	1/4	2.28	3/4	19.1	7/16	11.11	12.70	15.24	20.8	27.4	22.4
ILF3-2N	3/16	4.76	1/8	3.04	1/2	12.70	1/2	12.70	13.71	16.00	18.8	25.4	19.1
ILF4-2N	1/4	6.35	1/8	4.82	1/2	12.70	9/16	14.28	15.24	17.78	19.6	26.9	19.1
ILF4-4N	1/4	6.35	1/4	4.82	3/4	19.1	9/16	14.28	15.24	17.78	22.3	29.6	22.4
ILF4-6N	1/4	6.35	3/8	4.82	13/16	20.64	9/16	14.28	15.24	17.78	24.3	31.6	22.4
ILF4-8N	1/4	6.35	1/2	4.82	1-1/16	27	9/16	14.28	15.24	17.78	27.2	34.5	28.4
ILF5-2N	5/16	7.93	1/8	6.35	9/16	14.28	5/8	15.87	16.25	18.54	21.3	28.6	19.1
ILF5-4N	5/16	7.93	1/4	6.35	3/4	19.1	5/8	15.87	16.25	18.54	23.1	30.4	22.4
ILF6-2N	3/8	9.52	1/8	7.11	5/8	15.9	11/16	17.46	16.76	19.30	23.1	30.4	19.1
ILF6-4N	3/8	9.52	1/4	7.11	11/16	17.5	11/16	17.46	16.76	19.30	23.9	31.2	22.4
ILF6-6N	3/8	9.52	3/8	7.11	13/16	20.64	11/16	17.46	16.76	19.30	25.9	33.2	22.4
ILF6-8N	3/8	9.52	1/2	7.11	1-1/16	27	11/16	17.46	16.76	19.30	28.8	36.1	28.4
ILF8-4N	1/2	12.70	1/4	10.41	13/16	20.64	7/8	22.22	22.86	21.84	25.9	36.0	22.4
ILF8-6N	1/2	12.70	3/8	10.41	13/16	20.64	7/8	22.22	22.86	21.84	25.9	36.0	22.4
ILF8-8N	1/2	12.70	1/2	10.41	1-1/16	27	7/8	22.22	22.86	21.84	28.8	38.9	28.4
ILF10-6N	5/8	15.87	3/8	12.70	15/16	23.8	1	25.40	24.38	21.84	28.0	38.1	22.4
ILF10-8N	5/8	15.87	1/2	12.70	1-1/16	27	1	25.40	24.38	21.84	28.0	38.1	28.4
ILF12-8N	3/4	19.05	1/2	15.74	1-1/16	27	1-1/8	28.58	24.38	21.84	29.7	39.8	28.4
ILF12-12N	3/4	19.05	3/4	15.74	1-1/4	31.8	1-1/8	28.58	24.38	21.84	34.5	44.6	31.8
ILF14-12N	7/8	22.22	3/4	18.28	1-1/4	31.8	1-1/4	31.75	25.90	21.84	34.5	44.6	34.5
ILF16-12N	1	25.40	3/4	22.35	1-7/16	36.1	1-1/2	38.10	31.24	26.41	36.8	49.0	36.8
ILF16-16N	1	25.40	1	22.35	1-5/8	41.3	1-1/2	38.10	31.24	26.41	38.1	50.3	38.1

Connects Metric Tube to Male NPT Thread

Part No.	Tube O.D. D	T NPT	d min.	Width across flat		A	B	ℓ	L	L1
				h	H					
ILF6M-2N	6	1/8	4.8	12.7	14	15.3	17.7	19.6	26.9	19.1
ILF6M-4N	6	1/4	4.8	17.0	14	15.3	17.7	22.3	29.6	22.40
ILF6M-6N	6	3/8	4.8	20.6	14	15.3	17.7	24.8	32.1	22.40
ILF6M-8N	6	1/2	4.8	27.0	14	15.3	17.7	27.8	35.1	28.40
ILF8M-2N	8	1/8	6.3	17.0	16	16.2	18.6	23.1	28.6	21.3
ILF8M-4N	8	1/4	6.3	17.0	16	16.2	18.6	23.1	28.6	22.40
ILF8M-8N	8	1/2	6.3	27.0	16	16.2	18.6	28.6	35.9	28.40
ILF10M-2N	10	1/8	7.9	20.6	19	17.2	19.5	26.4	34.0	22.40
ILF10M-4N	10	1/4	7.9	20.6	19	17.2	19.5	26.4	34.0	22.40
ILF10M-6N	10	3/8	7.9	20.6	19	17.2	19.5	26.4	34.0	22.40
ILF10M-8N	10	1/2	7.9	27.0	19	17.2	19.5	29.4	37.0	28.4
ILF12M-4N	12	1/4	9.5	20.6	22	22.8	22.0	26.4	36.5	22.40
ILF12M-6N	12	3/8	9.5	20.6	22	22.8	22.0	26.4	39.5	28.4
ILF12M-8N	12	1/2	9.5	27.0	22	22.8	22.0	29.4	38.8	28.40
ILF16M-8N	16	1/2	12.7	27.0	25	24.4	22.0	29.4	39.5	28.40

17 ITRF-N FEMALE RUN TEE

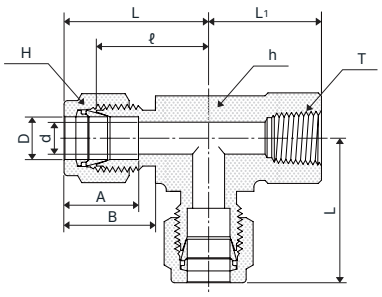



Connects Fractional Tube to Male NPT Thread

Part No.	Tube O.D. D		T NPT	d min.	Width across flat				A	B	ℓ	L	L1
					h		H						
	in	mm			in	mm	in	mm					
ITRF2-2N	1/8	3.17	1/8	2.28	1/2	12.70	7/16	11.11	12.70	15.24	18.1	24.7	19.1
ITRF2-4N	1/8	3.17	1/4	2.28	3/4	19.1	7/16	11.11	12.70	15.24	20.8	27.4	22.4
ITRF3-2N	3/16	4.76	1/8	3.04	1/2	12.70	1/2	12.70	13.71	16.00	18.8	25.4	19.1
ITRF4-2N	1/4	6.35	1/8	4.82	1/2	12.70	9/16	14.28	15.24	17.78	19.6	26.9	19.1
ITRF4-4N	1/4	6.35	1/4	4.82	3/4	19.1	9/16	14.28	15.24	17.78	22.3	29.6	22.4
ITRF4-6N	1/4	6.35	3/8	4.82	13/16	20.64	9/16	14.28	15.24	17.78	24.3	31.6	22.4
ITRF4-8N	1/4	6.35	1/2	4.82	1-1/16	27	9/16	14.28	15.24	17.78	27.2	34.5	28.4
ITRF5-2N	5/16	7.93	1/8	6.35	9/16	14.28	5/8	15.87	16.25	18.54	21.3	28.6	19.1
ITRF5-4N	5/16	7.93	1/4	6.35	3/4	19.1	5/8	15.87	16.25	18.54	23.1	30.4	22.4
ITRF6-2N	3/8	9.52	1/8	7.11	5/8	15.9	11/16	17.46	16.76	19.30	23.1	30.4	19.1
ITRF6-4N	3/8	9.52	1/4	7.11	11/16	17.5	11/16	17.46	16.76	19.30	23.9	31.2	22.4
ITRF6-6N	3/8	9.52	3/8	7.11	13/16	20.64	11/16	17.46	16.76	19.30	25.9	33.2	22.4
ITRF6-8N	3/8	9.52	1/2	7.11	1-1/16	27	11/16	17.46	16.76	19.30	28.8	36.1	28.4
ITRF8-4N	1/2	12.70	1/4	10.41	13/16	20.64	7/8	22.22	22.86	21.84	25.9	36.0	22.4
ITRF8-6N	1/2	12.70	3/8	10.41	13/16	20.64	7/8	22.22	22.86	21.84	25.9	36.0	22.4
ITRF8-8N	1/2	12.70	1/2	10.41	1-1/16	27	7/8	22.22	22.86	21.84	28.8	38.9	28.4
ITRF10-6N	5/8	15.87	3/8	12.70	15/16	23.8	1	25.40	24.38	21.84	28.0	38.1	22.4
ITRF10-8N	5/8	15.87	1/2	12.70	1-1/16	27	1	25.40	24.38	21.84	28.0	38.1	28.4
ITRF12-8N	3/4	19.05	1/2	15.74	1-1/16	27	1-1/8	28.58	24.38	21.84	29.7	39.8	28.4
ITRF12-12N	3/4	19.05	3/4	15.74	1-1/4	31.8	1-1/8	28.58	24.38	21.84	34.5	44.6	31.8
ITRF14-12N	7/8	22.22	3/4	18.28	1-1/4	31.8	1-1/4	31.75	25.90	21.84	34.5	44.6	34.5
ITRF16-12N	1	25.40	3/4	22.35	1-7/16	36.1	1-1/2	38.10	31.24	26.41	36.8	49.0	36.8
ITRF16-16N	1	25.40	1	22.35	1-5/8	41.3	1-1/2	38.10	31.24	26.41	38.1	50.3	38.1

Connects Metric Tube to Male NPT Thread

Part No.	Tube O.D. D	T NPT	d min.	Width across flat		A	B	ℓ	L	L1
				h	H					
ITRF6M-2N	6	1/8	4.8	12.7	14	15.3	17.7	19.6	26.9	19.1
ITRF6M-4N	6	1/4	4.8	17.0	14	15.3	17.7	22.3	29.6	22.40
ITRF6M-6N	6	3/8	4.8	20.6	14	15.3	17.7	24.8	32.1	22.40
ITRF6M-8N	6	1/2	4.8	27.0	14	15.3	17.7	27.8	35.1	28.40
ITRF8M-2N	8	1/8	6.3	17.0	16	16.2	18.6	23.1	28.6	21.3
ITRF8M-4N	8	1/4	6.3	17.0	16	16.2	18.6	23.1	28.6	22.40
ITRF8M-8N	8	1/2	6.3	27.0	16	16.2	18.6	28.6	35.9	28.40
ITRF10M-2N	10	1/8	7.9	20.6	19	17.2	19.5	26.4	34.0	22.40
ITRF10M-4N	10	1/4	7.9	20.6	19	17.2	19.5	26.4	34.0	22.40
ITRF10M-6N	10	3/8	7.9	20.6	19	17.2	19.5	26.4	34.0	22.40
ITRF10M-8N	10	1/2	7.9	27.0	19	17.2	19.5	29.4	37.0	28.4
ITRF12M-4N	12	1/4	9.5	20.6	22	22.8	22.0	26.4	36.5	22.40
ITRF12M-6N	12	3/8	9.5	20.6	22	22.8	22.0	26.4	39.5	28.4
ITRF12M-8N	12	1/2	9.5	27.0	22	22.8	22.0	29.4	38.8	28.40
ITRF16M-8N	16	1/2	12.7	27.0	25	24.4	22.0	29.4	39.5	28.40

18 ITBF-N FEMALE BRANCH TEE

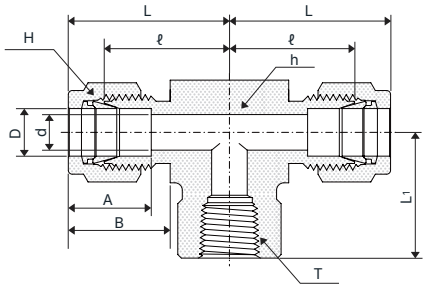



Connects Fractional Tube to Male NPT Thread

Part No.	Tube O.D. D		T NPT	d min.	Width across flat				A	B	ℓ	L	L1
					h		H						
	in	mm			in	mm	in	mm					
ITBF2-2N	1/8	3.17	1/8	2.28	1/2	12.70	7/16	11.11	12.70	15.24	18.1	24.7	19.1
ITBF2-4N	1/8	3.17	1/4	2.28	3/4	19.1	7/16	11.11	12.70	15.24	20.8	27.4	22.4
ITBF3-2N	3/16	4.76	1/8	3.04	1/2	12.70	1/2	12.70	13.71	16.00	18.8	25.4	19.1
ITBF4-2N	1/4	6.35	1/8	4.82	1/2	12.70	9/16	14.28	15.24	17.78	19.6	26.9	19.1
ITBF4-4N	1/4	6.35	1/4	4.82	3/4	19.1	9/16	14.28	15.24	17.78	22.3	29.6	22.4
ITBF4-6N	1/4	6.35	3/8	4.82	13/16	20.64	9/16	14.28	15.24	17.78	24.3	31.6	22.4
ITBF4-8N	1/4	6.35	1/2	4.82	1-1/16	27	9/16	14.28	15.24	17.78	27.2	34.5	28.4
ITBF5-2N	5/16	7.93	1/8	6.35	9/16	14.28	5/8	15.87	16.25	18.54	21.3	28.6	19.1
ITBF5-4N	5/16	7.93	1/4	6.35	3/4	19.1	5/8	15.87	16.25	18.54	23.1	30.4	22.4
ITBF6-2N	3/8	9.52	1/8	7.11	5/8	15.9	11/16	17.46	16.76	19.30	23.1	30.4	19.1
ITBF6-4N	3/8	9.52	1/4	7.11	11/16	17.5	11/16	17.46	16.76	19.30	23.9	31.2	22.4
ITBF6-6N	3/8	9.52	3/8	7.11	13/16	20.64	11/16	17.46	16.76	19.30	25.9	33.2	22.4
ITBF6-8N	3/8	9.52	1/2	7.11	1-1/16	27	11/16	17.46	16.76	19.30	28.8	36.1	28.4
ITBF8-4N	1/2	12.70	1/4	10.41	13/16	20.64	7/8	22.22	22.86	21.84	25.9	36.0	22.4
ITBF8-6N	1/2	12.70	3/8	10.41	13/16	20.64	7/8	22.22	22.86	21.84	25.9	36.0	22.4
ITBF8-8N	1/2	12.70	1/2	10.41	1-1/16	27	7/8	22.22	22.86	21.84	28.8	38.9	28.4
ITBF10-6N	5/8	15.87	3/8	12.70	15/16	23.8	1	25.40	24.38	21.84	28.0	38.1	22.4
ITBF10-8N	5/8	15.87	1/2	12.70	1-1/16	27	1	25.40	24.38	21.84	28.0	38.1	28.4
ITBF12-8N	3/4	19.05	1/2	15.74	1-1/16	27	1-1/8	28.58	24.38	21.84	29.7	39.8	28.4
ITBF12-12N	3/4	19.05	3/4	15.74	1-1/4	31.8	1-1/8	28.58	24.38	21.84	34.5	44.6	31.8
ITBF14-12N	7/8	22.22	3/4	18.28	1-1/4	31.8	1-1/4	31.75	25.90	21.84	34.5	44.6	34.5
ITBF16-12N	1	25.40	3/4	22.35	1-7/16	36.1	1-1/2	38.10	31.24	26.41	36.8	49.0	36.8
ITBF16-16N	1	25.40	1	22.35	1-5/8	41.3	1-1/2	38.10	31.24	26.41	38.1	50.3	38.1

Connects Metric Tube to Male NPT Thread

Part No.	Tube O.D. D	T NPT	d min.	Width across flat		A	B	ℓ	L	L1
				h	H					
ITBF6M-2N	6	1/8	4.8	12.7	14	15.3	17.7	19.6	26.9	19.1
ITBF6M-4N	6	1/4	4.8	17.0	14	15.3	17.7	22.3	29.6	22.40
ITBF6M-6N	6	3/8	4.8	20.6	14	15.3	17.7	24.8	32.1	22.40
ITBF6M-8N	6	1/2	4.8	27.0	14	15.3	17.7	27.8	35.1	28.40
ITBF8M-2N	8	1/8	6.3	17.0	16	16.2	18.6	23.1	28.6	21.3
ITBF8M-4N	8	1/4	6.3	17.0	16	16.2	18.6	23.1	28.6	22.40
ITBF8M-8N	8	1/2	6.3	27.0	16	16.2	18.6	28.6	35.9	28.40
ITBF10M-2N	10	1/8	7.9	20.6	19	17.2	19.5	26.4	34.0	22.40
ITBF10M-4N	10	1/4	7.9	20.6	19	17.2	19.5	26.4	34.0	22.40
ITBF10M-6N	10	3/8	7.9	20.6	19	17.2	19.5	26.4	34.0	22.40
ITBF10M-8N	10	1/2	7.9	27.0	19	17.2	19.5	29.4	37.0	28.4
ITBF12M-4N	12	1/4	9.5	20.6	22	22.8	22.0	26.4	36.5	22.40
ITBF12M-6N	12	3/8	9.5	20.6	22	22.8	22.0	26.4	39.5	28.4
ITBF12M-8N	12	1/2	9.5	27.0	22	22.8	22.0	29.4	38.8	28.40
ITBF16M-8N	16	1/2	12.7	27.0	25	24.4	22.0	29.4	39.5	28.40

01 IR PORT REDUCER

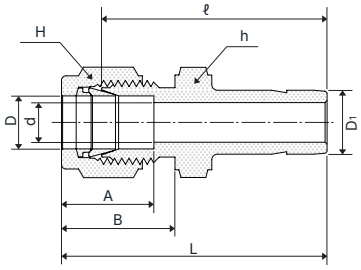

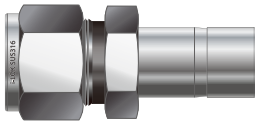

Connects Fractional Tube to Fractional i-LOK Tube Fitting Port

Part No.	Tube O.D.				d min.	Width across flat				A	B	ℓ	L
	D		D1			h		H					
	in	mm	in	mm		in	mm	in	mm				
IR1-2	1/16	1.59	1/8	3.17	1.27	5/16	7.93	5/16	7.93	8.63	10.92	25.40	29.21
IR1-4	1/16	1.59	1/4	6.35	1.27	5/16	7.93	5/16	7.93	8.63	10.92	27.68	31.49
IR2-1	1/8	3.17	1/16	1.59	0.76	7/16	11.11	7/16	11.11	12.70	15.24	22.35	28.95
IR2-2	1/8	3.17	1/8	3.17	2.03	7/16	11.11	7/16	11.11	12.70	15.24	26.92	33.52
IR2-3	1/8	3.17	3/16	4.76	2.28	7/16	11.11	7/16	11.11	12.70	15.24	27.68	34.29
IR2-4	1/8	3.17	1/4	6.35	2.28	7/16	11.11	7/16	11.11	12.70	15.24	29.46	36.06
IR2-6	1/8	3.17	3/8	9.52	2.28	7/16	11.11	7/16	11.11	12.70	15.24	30.98	37.59
IR2-8	1/8	3.17	1/2	12.70	2.28	9/16	14.28	7/16	11.11	12.70	15.24	37.59	44.19
IR3-2	3/16	4.76	1/8	3.17	1.70	7/16	11.11	1/2	12.70	13.71	16.00	28.19	34.79
IR3-4	3/16	4.76	1/4	6.35	3.04	7/16	11.11	1/2	12.70	13.71	16.00	30.48	37.08
IR4-2	1/4	6.35	1/8	3.17	2.03	1/2	12.70	9/16	14.28	15.24	17.78	29.46	36.83
IR4-3	1/4	6.35	3/16	4.76	3.04	1/2	12.70	9/16	14.28	15.24	17.78	30.22	37.59
IR4-4	1/4	6.35	1/4	6.35	4.82	1/2	12.70	9/16	14.28	15.24	17.78	31.75	39.11
IR4-5	1/4	6.35	5/16	7.93	4.82	1/2	12.70	9/16	14.28	15.24	17.78	32.51	39.89
IR4-6	1/4	6.35	3/8	9.52	4.82	1/2	12.70	9/16	14.28	15.24	17.78	33.27	40.64
IR4-8	1/4	6.35	1/2	12.70	4.82	9/16	14.28	9/16	14.28	15.24	17.78	38.86	46.22
IR4-10	1/4	6.35	5/8	15.87	4.82	11/16	17.46	9/16	14.28	15.24	17.78	40.64	48.00
IR4-12	1/4	6.35	3/4	19.05	4.82	13/16	20.64	9/16	14.28	15.24	17.78	40.38	47.75
IR5-6	5/16	7.93	3/8	9.52	6.35	9/16	14.28	5/8	15.87	16.25	18.54	34.54	41.91
IR5-8	5/16	7.93	1/2	12.70	6.35	9/16	14.28	5/8	15.87	16.25	18.54	40.13	47.49
IR6-4	3/8	9.52	1/4	6.35	4.82	5/8	15.87	11/16	17.46	16.76	19.30	34.03	41.40
IR6-6	3/8	9.52	3/8	9.52	7.11	5/8	15.87	11/16	17.46	16.76	19.30	35.81	43.18
IR6-8	3/8	9.52	1/2	12.70	7.11	5/8	15.87	11/16	17.46	16.76	19.30	41.14	48.51
IR6-10	3/8	9.52	5/8	15.87	7.11	11/16	17.46	11/16	17.46	16.76	19.30	42.92	50.29
IR6-12	3/8	9.52	3/4	19.05	7.11	13/16	20.64	11/16	17.46	16.76	19.30	42.92	50.29
IR8-4	1/2	12.70	1/4	6.35	4.82	13/16	20.64	7/8	22.22	22.86	21.84	34.79	44.95
IR8-6	1/2	12.70	3/8	9.52	7.11	13/16	20.64	7/8	22.22	22.86	21.84	36.79	46.73
IR8-8	1/2	12.70	1/2	12.70	9.40	13/16	20.64	7/8	22.22	22.86	21.84	36.57	52.32
IR8-10	1/2	12.70	5/8	15.87	10.41	13/16	20.64	7/8	22.22	22.86	21.84	42.16	53.84
IR8-12	1/2	12.70	3/4	19.05	10.41	13/16	20.64	7/8	22.22	22.86	21.84	43.68	53.84
IR8-16	1/2	12.70	1	25.40	10.41	1-1/16	26.98	7/8	22.22	22.86	21.84	50.03	60.19
IR10-12	5/8	15.87	3/4	19.05	12.70	15/16	23.81	1	25.40	24.38	21.84	44.45	54.61
IR10-14	5/8	15.87	7/8	22.22	12.70	15/16	23.81	1	25.40	24.38	21.84	45.97	56.13
IT10-16	5/8	15.87	1	25.40	12.70	1-1/16	26.98	1	25.40	24.38	21.84	50.80	60.96
IR12-8	3/4	19.05	1/2	12.70	9.40	1-1/16	26.98	1-1/8	28.57	24.38	21.84	44.45	54.61
IR12-16	3/4	19.05	1	25.40	15.74	1-1/16	26.98	1-1/8	28.57	24.38	21.84	52.32	62.48
IR16-20	1	25.40	1-1/4	31.75	22.35	1-3/8	34.92	1-1/2	38.10	31.24	26.41	68.32	80.51
IR16-24	1	25.40	1-1/2	38.10	22.35	1-5/8	41.28	1-1/2	38.10	31.24	26.41	76.96	89.15
IR16-32	1	25.40	2	50.80	22.35	2-1/8	53.98	1-1/2	38.10	31.24	26.41	100.33	112.52
IR20-24	1-1/4	31.75	1-1/2	38.10	27.68	1-3/4	44.45	1-7/8	47.62	41.14	38.86	82.04	104.14
IR20-32	1-1/4	31.75	2	50.80	27.68	2-1/8	53.97	1-7/8	47.62	41.14	38.86	103.12	125.22
IR24-32	1-1/2	38.10	2	50.80	34.03	2-1/4	57.15	2-1/4	57.15	50.03	45.21	104.14	131.31

02 IR PORT REDUCER

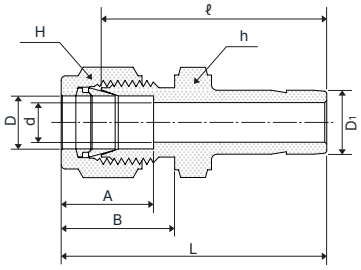

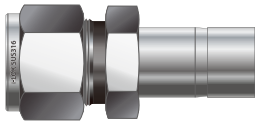

Connects Metric Tube to Metric i-LOK Tube Fitting Port

Part No.	Tube O.D.		d min.	Width across flat		A	B	ℓ	L
	D	D1		h	H				
IR2M-3M	2	3	1.7	12	12	12.9	15.3	26.9	35.3
IR3M-4M	3	4	2.2	12	12	12.9	15.3	28.4	35.0
IR3M-6M	3	6	2.4	12	12	12.9	15.3	29.5	36.1
IR3M-10M	3	10	2.4	12	12	12.9	15.3	31.8	38.4
IR4M-6M	4	6	2.4	12	12	13.7	16.1	30.5	37.1
IR6M-3M	6	3	1.9	14	14	15.3	17.7	29.5	36.9
IR6M-8M	6	8	4.8	14	14	15.3	17.7	32.5	39.9
IR6M-10M	6	10	4.8	14	14	15.3	17.7	33.3	40.7
IR6M-12M	6	12	4.8	14	14	15.3	17.7	38.9	46.3
IR8M-6M	8	6	4.1	14	16	16.2	18.6	32.8	40.3
IR8M-10M	8	10	6.3	14	16	16.2	18.6	34.5	42.0
IR8M-12M	8	12	6.3	14	16	16.2	18.6	40.1	47.6
IR10M-6M	10	6	4.1	17	19	17.2	19.5	34.8	42.4
IR10M-12M	10	12	7.9	17	19	17.2	19.5	42.2	49.8
IR10M-15M	10	15	7.9	17	19	17.2	19.5	43.7	51.3
IR10M-18M	10	18	7.9	19	19	17.2	19.5	43.7	51.3
IR12M-6M	12	6	4.1	22	22	22.8	22.0	34.8	44.9
IR12M-10M	12	10	7.1	22	22	22.8	22.0	36.6	46.7
IR12M-16M	12	16	9.5	22	22	22.8	22.0	43.7	53.8
IR12M-18M	12	18	9.5	22	22	22.8	22.0	43.7	53.8
IR12M-20M	12	20	9.5	22	22	22.8	22.0	46.0	56.1
IR12M-22M	12	22	9.5	24	22	22.8	22.0	46.0	56.1
IR12M-25M	12	25	9.5	27	22	22.8	22.0	52.3	62.4
IR16M-12M	16	12	8.8	24	25	24.4	22.0	42.9	53.0
IR18M-12M	18	12	8.8	27	30	24.4	22.0	44.5	54.6
IR18M-16M	18	16	12.0	27	30	24.4	22.0	46.0	56.1
IR18M-20M	18	20	15.1	27	30	24.4	22.0	47.5	57.6
IR18M-22M	18	22	15.1	27	30	24.4	22.0	47.5	57.6
IR18M-25M	18	25	15.1	27	30	24.4	22.0	52.3	62.4
IR20M-16M	20	16	12.0	30	32	26.0	22.0	47.8	57.9
IR20M-18M	20	18	13.9	30	32	26.0	22.0	47.8	57.9
IR20M-22M	20	22	15.9	30	32	26.0	22.0	49.3	59.4
IR20M-25M	20	25	15.9	30	32	26.0	22.0	54.1	64.2
IR22M-18M	22	18	13.9	30	32	26.0	22.0	47.8	57.9
IR22M-20M	22	20	15.5	30	32	26.0	22.0	49.3	59.4
IR22M-25M	22	25	18.3	30	32	26.0	22.0	54.1	64.2
IR25M-18M	25	18	13.9	35	38	31.3	26.5	50.8	63.1
IR24M-20M	25	20	15.5	35	38	31.3	26.5	52.3	64.6

03 IR PORT REDUCER

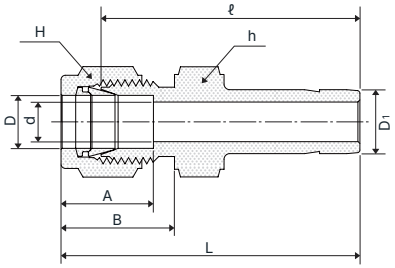

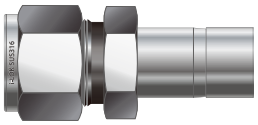

Connects Metric Tube to Fractional i-LOK Tube Fitting Port

Part No.	Tube O.D. D	Tube O.D. D1		d min.	Width across flat h	Width across flat H	A	B	ℓ	L
		in	mm							
IR2M-2	2	1/8	3.17	1.7	12	12	12.9	15.3	26.9	33.5
IR3M-2	3	1/8	3.17	2.0	12	12	12.9	15.3	26.9	33.5
IR3M-4	3	1/4	6.35	2.4	12	12	12.9	15.3	29.5	36.1
IR4M-4	4	1/4	6.35	2.4	12	12	13.7	16.1	30.5	37.1
IR6M-2	6	1/8	3.18	2.0	14	14	15.3	17.7	29.5	36.9
IR6M-4	6	1/4	6.35	4.3	14	14	15.3	17.7	31.8	39.2
IR6M-5	6	5/16	7.93	4.8	14	14	15.3	17.7	32.5	39.9
IR6M-6	6	3/8	9.52	4.8	14	14	15.3	17.7	33.3	40.7
IR6M-8	6	1/2	12.70	4.8	14	14	15.3	17.7	38.9	46.3
IR8M-6	8	3/8	9.52	6.3	14	16	16.2	18.6	34.5	42.0
IR8M-8	8	1/2	12.70	6.3	14	16	16.2	18.6	40.1	47.6
IR10M-6	10	3/8	9.52	6.9	17	19	17.2	19.5	36.6	44.2
IR10M-8	10	1/2	12.70	7.9	17	19	17.2	19.5	42.2	49.8
IR12M-8	12	1/2	12.70	9.4	22	22	22.8	22.0	42.2	52.3
IR12M-12	12	3/4	19.05	9.4	22	22	22.8	22.0	43.7	53.8
IR18M-12	18	3/4	19.05	14.7	27	30	24.4	22.0	46.0	56.1
IR18M-16	18	1	25.40	15.1	27	30	24.4	22.0	52.3	62.4
IR25M-16	25	1	25.40	20.0	35	38	31.3	26.5	57.2	69.5

Connects Fractional Tube to Fractional i-LOK Tube Fitting Port

Part No.	Tube O.D. D		d min.	Width across flat h, h_1		Width across flat H		A	ℓ	ℓ1	L	L1	Panel Hole Drill Size	Panel Max. Thickness
	in	mm		in	mm	in	mm							
IBR2-2	1/8	3.17	2.03	1/2	12.7	7/16	11.11	12.70	42.92	24.63	49.53	31.24	8.33	12.70
IBR4-4	1/4	6.35	4.32	5/8	15.87	9/16	14.28	15.24	48.51	26.16	55.88	33.52	11.50	10.16
IBR6-6	3/8	9.52	6.86	3/4	19.05	11/16	17.46	16.76	53.84	29.64	61.21	36.83	14.68	11.17
IBR8-8	1/2	12.70	9.40	15/16	23.81	7/8	22.22	22.86	62.73	31.75	72.89	41.91	19.44	12.70
IBR10-10	5/8	15.87	11.94	1-1/16	26.98	1	25.4	24.38	65.02	32.51	75.18	42.67	22.62	12.70
IBR16-16	1	25.4	20.32	1-5/8	41.27	1-1/2	38.1	31.24	88.13	45.21	100.33	57.40	33.73	19.05

04 ILA ADJUSTABLE ELBOW

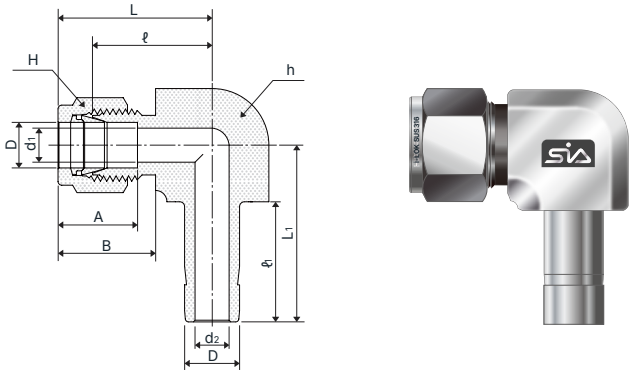

Connects Fractional Tube to Fractional i-LOK Tube Fitting Port

Part No.	Tube O.D. D		d_1 min.	d2	Width across flat				A	B	ℓ	ℓ1	L	L1
					h		H							
	in	mm			in	mm	in	mm						
ILA-1	1/16	1.58	1.27	0.76	3/8	9.52	5/16	7.93	8.63	10.92	14.00		22.30	16.00
ILA-2	1/8	3.17	2.28	2.03	3/8	9.52	7/16	11.11	12.70	15.24	15.74	13.45	22.30	20.59
ILA-3	3/16	4.76	3.04	3.04	1/2	12.70	1/2	12.70	13.71	16.00	17.78	14.20	25.40	22.48
ILA-4	1/4	6.35	4.82	4.32	1/2	12.70	9/16	14.28	15.24	17.78	19.55	15.75	27.0	25.0
ILA-5	5/16	7.93	6.35	5.59	9/16	14.28	5/8	15.87	16.25	18.54	21.33	16.80	28.80	27.08
ILA-6	3/8	9.52	7.11	6.86	5/8	15.87	11/16	17.46	16.76	19.30	23.11	17.50	31.5	26.0
ILA-8	1/2	12.70	10.41	9.40	13/16	20.63	7//8	22.22	22.86	21.84	25.90	23.20	36.0	37.3
ILA-10	5/5	15.87	12.70	11.94	15/16	23.81	1	25.40	24.38	21.84	28.70	24.70	38.80	41.75
ILA-12	3/4	19.05	15.74	14.73	1-1/16	26.98	1-1/8	28.57	24.38	21.84	29.71	24.70	38.80	42.60
ILA-14	7/8	22.22	18.28	18.28	1-3/16	30.00	1-1/4	31.75	25.90	21.84	34.54	26.70	39.80	49.39
ILA-16	1	25.40	22.35	20.32	1-3/8	34.92	1-1/2	38.10	31.24	26.41	36.83	31.70	49.02	55.60

Connects Metric Tube to Metric i-LOK Tube Fitting Port

Part No.	Tube O.D. D	d_1 min.	d2	Width across flat		A	B	ℓ	ℓ1	L	L1
				h	H						
ILA-6M	6	4.8	4.1	12.7	14	15.3	17.7	19.6	15.8	26.9	25.1
ILA-8M	8	6.3	5.6	14.3	16	16.2	18.6	21.3	16.8	28.6	27.0
ILA-10M	10	7.9	7.1	17.0	19	17.2	19.5	23.9	17.8	31.5	29.8
ILA-12M	12	9.5	8.8	20.6	22	22.8	22.0	25.9	23.4	36.0	37.4
ILA-14M	14	11.1	10.0	24.0	25	24.4	22.0	28.7	25.1	38.8	41.9
ILA-15M	15	12.0	11.0	24.0	25	24.4	22.0	28.7	25.1	38.8	41.9
ILA-16M	16	12.7	12.0	24.0	25	24.4	22.0	28.7	25.1	38.8	41.9
ILA-18M	18	15.1	13.9	27.0	30	24.4	22.0	29.7	25.1	39.8	42.9
ILA-20M	20	15.9	15.2	32.0	32	26.0	22.0	32.5	26.6	42.6	47.2
ILA-22M	22	18.3	17.0	32.0	32	26.0	22.0	32.5	26.7	42.6	47.3
ILA-25M	25	21.8	20.0	36.0	41	31.3	26.5	36.8	31.7	49.0	54.2
ILA-28M	28	24.0	22.5	41.0	46	36.6	36.6	44.7	39.1	65.6	68.0

05 ITRA ADJUSTABLE RUN TEE

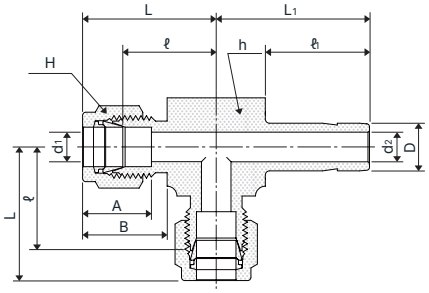



Connects Fractional Tube to Fractional i-LOK Tube Fitting Port

Part No.	Tube O.D. D		d_1 min.	d2	Width across flat				A	B	ℓ	ℓ1	L	L1
					h		H							
	in	mm			in	mm	in	mm						
ITRA-1	1/16	1.58	1.27	0.76	3/8	9.52	5/16	7.93	8.63	10.92	14.00		22.30	16.00
ITRA-2	1/8	3.17	2.28	2.03	3/8	9.52	7/16	11.11	12.70	15.24	15.74	13.45	22.30	20.59
ITRA-3	3/16	4.76	3.04	3.04	1/2	12.70	1/2	12.70	13.71	16.00	17.78	14.20	25.40	22.48
ITRA-4	1/4	6.35	4.82	4.32	1/2	12.70	9/16	14.28	15.24	17.78	19.55	15.75	27.0	25.0
ITRA-5	5/16	7.93	6.35	5.59	9/16	14.28	5/8	15.87	16.25	18.54	21.33	16.80	28.80	27.08
ITRA-6	3/8	9.52	7.11	6.86	5/8	15.87	11/16	17.46	16.76	19.30	23.11	17.50	31.5	26.0
ITRA-8	1/2	12.70	10.41	9.40	13/16	20.63	7//8	22.22	22.86	21.84	25.90	23.20	36.0	37.3
ITRA-10	5/8	15.87	12.70	11.94	15/16	23.81	1	25.40	24.38	21.84	28.70	24.70	38.80	41.75
ITRA-12	3/4	19.05	15.74	14.73	1-1/16	26.98	1-1/8	28.57	24.38	21.84	29.71	24.70	38.80	42.60
ITRA-14	7/8	22.22	18.28	18.28	1-3/16	30.00	1-1/4	31.75	25.90	21.84	34.54	26.70	39.80	49.39
ITRA-16	1	25.40	22.35	20.32	1-3/8	34.92	1-1/2	38.10	31.24	26.41	36.83	31.70	49.02	55.60

Connects Metric Tube to Metric i-LOK Tube Fitting Port

Part No.	Tube O.D. D	d_1 min.	d2	Width across flat		A	B	ℓ	ℓ1	L	L1
				h	H						
ITRA-6M	6	4.8	4.1	12.7	14	15.3	17.7	19.6	15.8	26.9	25.1
ITRA-8M	8	6.3	5.6	14.3	16	16.2	18.6	21.3	16.8	28.6	27.0
ITRA-10M	10	7.9	7.1	17.0	19	17.2	19.5	23.9	17.8	31.5	29.8
ITRA-12M	12	9.5	8.8	20.6	22	22.8	22.0	25.9	23.4	36.0	37.4
ITRA-14M	14	11.1	10.0	24.0	25	24.4	22.0	28.7	25.1	38.8	41.9
ITRA-15M	15	12.0	11.0	24.0	25	24.4	22.0	28.7	25.1	38.8	41.9
ITRA-16M	16	12.7	12.0	24.0	25	24.4	22.0	28.7	25.1	38.8	41.9
ITRA-18M	18	15.1	13.9	27.0	30	24.4	22.0	29.7	25.1	39.8	42.9
ITRA-20M	20	15.9	15.2	32.0	32	26.0	22.0	32.5	26.6	42.6	47.2
ITRA-22M	22	18.3	17.0	32.0	32	26.0	22.0	32.5	26.7	42.6	47.3
ITRA-25M	25	21.8	20.0	36.0	41	31.3	26.5	36.8	31.7	49.0	54.2
ITRA-28M	28	24.0	22.5	41.0	46	36.6	36.6	44.7	39.1	65.6	68.0

06 ITBA ADJUSTABLE BRANCH TEE

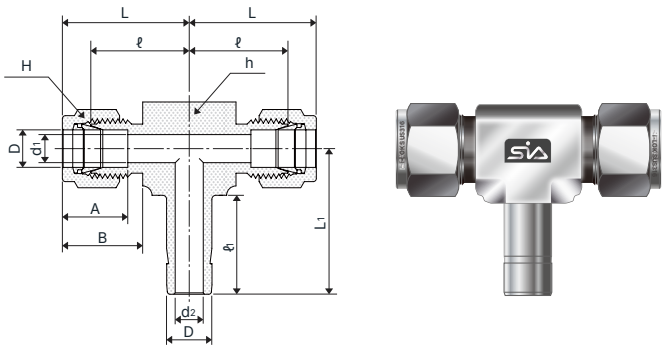

Connects Fractional Tube to Fractional i-LOK Tube Fitting Port

Part No.	Tube O.D. D		d_1 min.	d2	Width across flat				A	B	ℓ	ℓ1	L	L1
					h		H							
	in	mm			in	mm	in	mm						
ITBA-1	1/16	1.58	1.27	0.76	3/8	9.52	5/16	7.93	8.63	10.92	14.00		22.30	16.00
ITBA-2	1/8	3.17	2.28	2.03	3/8	9.52	7/16	11.11	12.70	15.24	15.74	13.45	22.30	20.59
ITBA-3	3/16	4.76	3.04	3.04	1/2	12.70	1/2	12.70	13.71	16.00	17.78	14.20	25.40	22.48
ITBA-4	1/4	6.35	4.82	4.32	1/2	12.70	9/16	14.28	15.24	17.78	19.55	15.75	27.0	25.0
ITBA-5	5/16	7.93	6.35	5.59	9/16	14.28	5/8	15.87	16.25	18.54	21.33	16.80	28.80	27.08
ITBA-6	3/8	9.52	7.11	6.86	5/8	15.87	11/16	17.46	16.76	19.30	23.11	17.50	31.5	26.0
ITBA-8	1/2	12.70	10.41	9.40	13/16	20.63	7//8	22.22	22.86	21.84	25.90	23.20	36.0	37.3
ITBA-10	5/8	15.87	12.70	11.94	15/16	23.81	1	25.40	24.38	21.84	28.70	24.70	38.80	41.75
ITBA-12	3/4	19.05	15.74	14.73	1-1/16	26.98	1-1/8	28.57	24.38	21.84	29.71	24.70	38.80	42.60
ITBA-14	7/8	22.22	18.28	18.28	1-3/16	30.00	1-1/4	31.75	25.90	21.84	34.54	26.70	39.80	49.39
ITBA-16	1	25.40	22.35	20.32	1-3/8	34.92	1-1/2	38.10	31.24	26.41	36.83	31.70	49.02	55.60

Connects Metric Tube to Metric i-LOK Tube Fitting Port

Part No.	Tube O.D. D	d_1 min.	d2	Width across flat		A	B	ℓ	ℓ1	L	L1
				h	H						
ITBA-6M	6	4.8	4.1	12.7	14	15.3	17.7	19.6	15.8	26.9	25.1
ITBA-8M	8	6.3	5.6	14.3	16	16.2	18.6	21.3	16.8	28.6	27.0
ITBA-10M	10	7.9	7.1	17.0	19	17.2	19.5	23.9	17.8	31.5	29.8
ITBA-12M	12	9.5	8.8	20.6	22	22.8	22.0	25.9	23.4	36.0	37.4
ITBA-14M	14	11.1	10.0	24.0	25	24.4	22.0	28.7	25.1	38.8	41.9
ITBA-15M	15	12.0	11.0	24.0	25	24.4	22.0	28.7	25.1	38.8	41.9
ITBA-16M	16	12.7	12.0	24.0	25	24.4	22.0	28.7	25.1	38.8	41.9
ITBA-18M	18	15.1	13.9	27.0	30	24.4	22.0	29.7	25.1	39.8	42.9
ITBA-20M	20	15.9	15.2	32.0	32	26.0	22.0	32.5	26.6	42.6	47.2
ITBA-22M	22	18.3	17.0	32.0	32	26.0	22.0	32.5	26.7	42.6	47.3
ITBA-25M	25	21.8	20.0	36.0	41	31.3	26.5	36.8	31.7	49.0	54.2
ITBA-28M	28	24.0	22.5	41.0	46	36.6	36.6	44.7	39.1	65.6	68.0

07 IAM-N MALE TUBE ADAPTOR

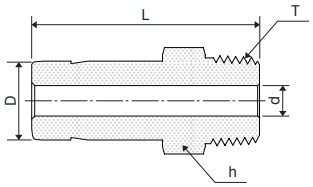

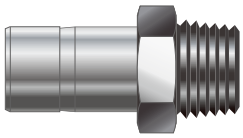

Connects Fractional i-LOK Tube Fitting Port to Female NPT Thread

Part No.	Tube O.D. D		T NPT	d min.	Width across flat h		L
	in	mm			in	mm	
IAM2-2N	1/8	3.17	1/8	2.03	7/16	11.11	29.50
IAM2-4M	1/8	3.17	1/4	2.03	9/16	14.28	34.80
IAM3-2N	3/16	4.76	1/8	3.04	7/16	11.11	30.22
IAM3-4N	3/16	4.76	1/4	3.04	9/16	14.28	35.56
IAM4-2N	1/4	6.35	1/8	4.32	7/16	11.11	31.80
IAM4-4N	1/4	6.35	1/4	4.32	9/16	14.28	37.08
IAM4-6N	1/4	6.35	3/8	4.32	11/16	17.46	37.84
IAM4-8N	1/4	6.35	1/2	4.32	7/8	22.22	43.43
IAM5-2N	5/16	7.93	1/8	4.57	7/16	11.11	32.76
IAM5-4N	5/16	7.93	1/4	5.59	9/16	14.28	38.10
IAM6-2N	3/8	9.52	1/8	4.83	7/16	11.11	33.50
IAM6-4N	3/8	9.52	1/4	6.86	9/16	14.28	38.90
IAM6-6N	3/8	9.52	3/8	6.86	11/16	17.46	39.60
IAM6-8N	3/8	9.52	1/2	6.86	7/8	22.22	45.20
IAM8-4N	1/2	12.70	1/4	7.11	9/16	14.28	44.50
IAM8-6N	1/2	12.70	3/8	9.4	11/16	17.46	45.20
IAM8-8N	1/2	12.70	1/2	9.4	7/8	22.22	50.80
IAM10-6N	5/8	15.87	3/8	9.5	11/16	17.46	47.40
IAM10-8N	5/8	15.87	1/2	11.94	7/8	22.22	52.30
IAM10-12N	5/8	15.87	3/4	12.7	1-1/16	26.98	52.30
IAM12-8N	3/4	19.05	1/2	11.94	7/8	22.22	52.30
IAM12-12N	3/4	19.05	3/4	14.73	1-1/16	26.98	52.30
IAM12-16N	3/4	19.05	1	14.73	1-3/8	34.92	57.91
IAM14-12N	7/8	22.22	3/4	15.75	1-1/16	26.98	54.80
IAM16-12N	1	25.40	3/4	15.75	1-1/16	26.98	58.70
IAM16-16N	1	25.40	1	20.32	1-3/8	34.92	66.00
IAM20-20N	1-1/4	31.75	1-1/4	25.91	1-3/4	44.45	80.26
IAM24-24N	1-1/2	38.10	1-1/2	31.75	2-1/8	53.98	94.48
IAM32-32N	2	50.80	2	43.69	2-3/4	69.85	119.38

Connects Metric i-LOK Tube Fitting Port to Female ISO Thread

Part No.	Tube O.D. D	T (PT)	d min.	Width across flat h	L
IAM6M-2R	6	1/8	4.1	12	32.8
IAM6M-4R	6	1/4	4.1	14	38.1
IAM8M-4R	8	1/4	5.6	14	39.1
IAM10M-4R	10	1/4	7.1	14	39.9
IAM10M-6R	10	3/8	7.1	17	40.6
IAM10M-8R	10	1/2	7.1	22	45.2
IAM12M-4R	12	1/4	7.1	14	46.5
IAM12M-6R	12	3/8	8.8	17	46.5
IAM12M-8R	12	1/2	8.8	22	52.0
IAM18M-8R	18	1/2	11.9	22	53.2
IAM18M-12R	18	3/4	13.9	27	53.2
IAM28M-16R	28	1	22.2	35	74.7
IAM28M-20R	28	1-1/4	22.4	46	76.2
IAM32M-20R	32	1-1/4	26.5	46	81.0
IAM38M-24R	38	1-1/2	31.8	55	92.2

08 IAM-G MALE ISO PARALLEL TUBE ADAPTOR

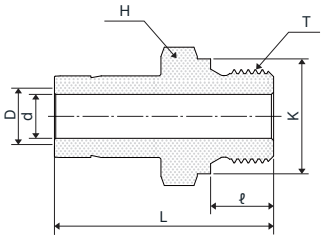

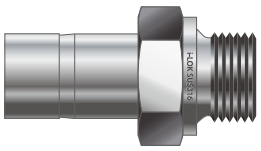

Connects Fractional i-LOK Tube Fitting Port to Female ISO Parallel Thread

Part No.	Tube O.D. D		T (PF)	d min.	Width across flat h		ℓ	L	K
	in	mm			in	mm			
IAM2-2G	1/8	3.17	1/8	2.03	9/16	14.28	7.11	40.0	13.72
IAM2-4G	1/8	3.17	1/4	2.03	3/4	19.05	11.17	35.8	17.78
IAM4-2G	1/4	6.35	1/8	4.06	9/16	14.28	7.11	33.27	13.72
IAM4-4G	1/4	6.35	1/4	4.32	3/4	19.05	11.17	38.1	17.78
IAM6-4G	3/8	9.52	1/4	5.84	3/4	19.05	11.17	39.9	17.78
IAM6-6G	3/8	9.52	3/8	6.86	7/8	22.22	11.17	40.64	21.59
IAM8-4G	1/2	12.70	1/4	5.84	3/4	19.05	11.17	45.5	17.78
IAM8-6G	1/2	12.70	3/8	7.88	7/8	22.22	11.17	46.2	21.59
IAM8-8G	1/2	12.70	1/2	9.4	1-1/16	26.98	14.22	49.3	25.91
IAM12-12G	3/4	19.05	3/4	14.73	1-5/16	33.33	15.75	54.88	31.75
IAM16-16G	1	25.40	1	19.8	1-5/8	41.28	18.29	64.5	38.86

Connects Metric i-LOK Tube Fitting Port to Female ISO Parallel Thread

Part No.	Tube O.D. D	T (PF)	d min.	Width across flat h	ℓ	L	K
IAM6M-2G	6	1/8	4.0	14	7.1	34.3	13.7
IAM6M-4G	6	1/4	4.1	19	11.2	39.1	17.9
IAM8M-4G	8	1/4	5.6	19	11.2	40.1	17.9
IAM10M-4G	10	1/4	5.9	19	11.2	40.9	17.9
IAM10M-6G	10	3/8	7.1	22	11.2	41.7	21.7
IAM10M-8G	10	1/2	7.1	27	14.2	44.7	25.9
IAM12M-4G	12	1/4	5.9	19	11.2	46.7	17.9
IAM12M-6G	12	3/8	7.9	22	11.2	47.2	21.7
IAM12M-8G	12	1/2	8.8	27	14.2	50.5	25.9
IAM18M-8G	18	1/2	11.9	27	14.2	52.1	25.9
IAM18M-12G	18	3/4	13.9	35	15.7	56.1	31.9
IAM28M-16G	28	1	19.8	41	18.3	72.9	39.0
IAM28M-20G	28	1-1/4	22.5	50	19.8	77.0	49.0
IAM30M-20G	30	1-1/4	24.3	50	19.8	80.8	49.0
IAM32M-20G	32	1-1/4	26.5	50	19.8	81.8	49.0
IAM38M-24G	38	1-1/2	31.6	55	22.1	94.5	54.7

09 IAF-N FEMALE TUBE ADAPTOR

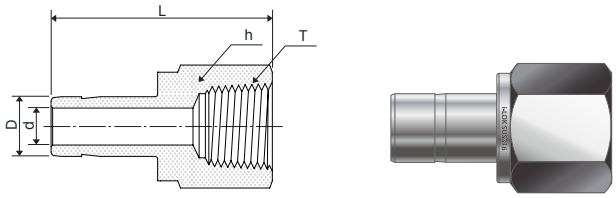

Connects Fractional i-LOK Tube Fitting Port to Male NPT Thread

Part No.	Tube O.D. D		T NPT	d min.	Width across flat h		L
	in	mm			in	mm	
IAF2-2N	1/8	3.17	1/8	2.03	9/16	14.28	31.50
IAF2-4M	1/8	3.17	1/4	2.03	3/4	19.05	35.30
IAF3-2N	3/16	4.76	1/8	3.04	9/16	14.28	32.00
IAF3-4N	3/16	4.76	1/4	3.04	3/4	19.05	35.81
IAF4-2N	1/4	6.35	1/8	4.32	9/16	14.28	33.02
IAF4-4N	1/4	6.35	1/4	4.32	3/4	19.05	37.10
IAF4-6N	1/4	6.35	3/8	4.32	7/8	22.22	39.37
IAF4-8N	1/4	6.35	1/2	4.32	1-1/16	26.98	45.50
IAF5-2N	5/16	7.93	1/8	5.59	9/16	14.28	34.29
IAF5-4N	5/16	7.93	1/4	5.59	3/4	19.05	37.59
IAF6-2N	3/8	9.52	1/8	6.86	9/16	14.28	34.29
IAF6-4N	3/8	9.52	1/4	6.86	3/4	19.05	38.10
IAF6-6N	3/8	9.52	3/8	6.86	7/8	22.22	40.38
IAF6-8N	3/8	9.52	1/2	6.86	1-1/16	26.98	46.73
IAF8-4N	1/2	12.70	1/4	9.40	3/4	19.05	43.43
IAF8-6N	1/2	12.70	3/8	9.40	7/8	22.22	45.46
IAF8-8N	1/2	12.70	1/2	9.40	1-1/16	26.98	51.80
IAF10-6N	5/8	15.87	3/8	11.94	7/8	22.22	48.26
IAF10-8N	5/8	15.87	1/2	11.94	1-1/16	26.98	53.0
IAF10-12N	5/8	15.87	3/4	11.94	1-5/16	33.33	55.37
IAF12-8N	3/4	19.05	1/2	14.73	1-1/16	26.98	52.83
IAF12-12N	3/4	19.05	3/4	14.73	1-5/16	33.33	54.86
IAF12-16N	3/4	19.05	1	14.73	1-5/8	41.27	58.42
IAF14-12N	7/8	22.22	3/4	18.20	1-5/16	33.33	57.15
IAF16-12N	1	25.40	3/4	20.32	1-5/16	33.33	60.70
IAF16-16N	1	25.40	1	20.32	1-5/8	41.27	64.26
IAF20-20N	1-1/4	31.75	1-1/4	25.91	2-1/8	53.98	77.72
IAF24-24N	1-1/2	38.10	1-1/2	31.75	2-3/8	60.33	88.90
IAF32-32N	2	50.80	2	43.69	2-7/8	73.03	107.44

Connects Metric i-LOK Tube Fitting Port to Male ISO Tapered Thread

Part No.	Tube O.D. D	T (PT)	d min.	Width across flat h	L
IAF3M-2R	3	1/8	1.9	14	31.15
IAF6M-2R	6	1/8	4.1	14	32.50
IAF6M-4R	6	1/4	4.1	19	37.10
IAF8M-4R	8	1/4	5.6	19	37.60
IAF10M-4R	10	1/4	7.1	19	38.10
IAF10M-6R	10	3/8	7.1	22	40.10
IAF10M-8R	10	1/2	7.1	27	46.50
IAF12M-4R	12	1/4	8.8	19	43.70
IAF12M-6R	12	3/8	8.8	22	46.00
IAF12M-8R	12	1/2	8.8	27	52.30
IAF18M-12R	18	3/4	13.9	35	54.82

10 IAM-U MALE SAE TUBE ADAPTOR

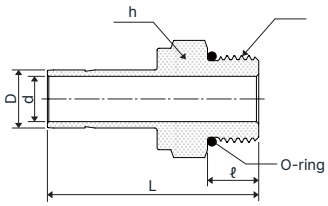

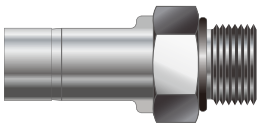

Connects Fractional i-LOK Tube Fitting Port to SAE Straight Thread Boss

Part No.	Tube O.D. D		Straight Thread U	d min.	Width across flat h		ℓ	L	O-ring Uniform Size Number
	in	T(U)			in	mm			
IAM2-2U	1/8	3.17	5/16-24	2.03	7/16	11.11	7.62	30.48	-902
IAM4-4U	1/4	6.35	7/16-20	4.31	9/16	14.28	9.14	35.30	-904
IAM6-4U	3/8	9.52	7/16-20	5.08	9/16	14.28	9.14	37.08	-904
IAM6-6U	3/8	9.52	9/16-18	6.85	11/16	17.46	9.90	38.60	-906
IAM6-8U	3/8	9.52	3/4-16	6.85	7/8	22.22	11.17	40.64	-908
IAM8-6U	1/2	12.70	9/16-18	7.11	11/16	17.46	9.90	44.20	-906
IAM8-8U	1/2	12.70	3/4-16	9.40	7/8	22.22	11.17	46.22	-908
IAM12-12U	3/4	19.05	1-1/16-12	14.73	1-1/4	31.75	14.98	53.34	-912
IAM16-16U	1	25.40	1-5/16-12	20.31	1-1/2	38.1	14.98	61.21	-916

Connects Fractional i-LOK Tube Fitting Port to SAE Straight Thread Boss

Part No.	Tube O.D. D		Straight Thread T(U)	d min.	Width across flat h		L	O-ring Uniform Size Number
	in	mm			in	mm		
IAM2-2UO	1/8	3.17	5/16-24	2.03	9/16	14.28	32.51	-011
IAM3-3UO	3/16	4.76	3/8-24	3.05	5/8	15.87	35.05	-013
IAM4-4UO	1/4	6.35	7/16-20	4.32	3/4	19.05	39.11	-013
IAM5-5UO	5/16	7.93	1/2-20	5.59	7/8	22.22	41.65	-112
IAM6-6UO	3/8	9.52	9/16-18	6.85	15/16	23.81	43.18	-113
IAM8-8UO	1/2	12.70	3/4-16	9.40	1-1/8	28.57	49.53	-116

Connects Fractional i-LOK Tube Fitting Port to AN Flare Tube

Part No.	Tube O.D. D		AN Tube Flare Size		Straight Thread T(U)	d min.	Width across flat h		L
	in	mm	in	mm			in	mm	
IMAA4-4	1/4	6.35	1/4	6.35	7/16-20	4.32	1/2	12.70	37.08
IMAA6-4	3/8	9.52	1/4	6.35	7/16-20	4.32			38.86
IMAA6-6	3/8	9.52	3/8	9.52	9/16-18	6.86	5/8	15.87	39.62
IMAA8-8	1/2	12.70	1/2	12.70	3/4-16	9.40	13/16	20.64	48.51
IMAA12-12	3/4	19.05	3/4	19.05	1-1/16-12	14.73	1-1/8	28.58	56.13
IMAA16-16	1	25.40	1	25.40	1-5/16-12	20.32	1-3/8	34.92	65.53

11 ICP PORT CONNECTOR

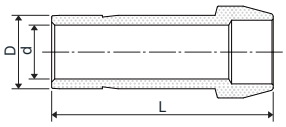

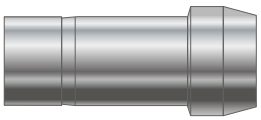

Connects Fractional i-LOK Tube Fitting Ports

Part No.	Tube O.D. D		d min.	L
	in	mm		
ICP-1	1/16	1.59	0.76	13.72
ICP-2	1/8	3.17	2.03	22.35
ICP-4	1/4	6.35	4.32	24.89
ICP-5	5/16	7.93	5.59	25.91
ICP-6	3/8	9.52	6.86	26.67
ICP-8	1/2	12.70	9.40	36.32
ICP-12	3/4	19.05	14.3	37.85
ICP-16	1	25.40	20.32	49.28

Connects Metric i-LOK Tube Fitting Ports

Part No.	Tube O.D. D	d min.	L
ICP-3M	3	1.9	22.2
ICP-4M	4	2.2	23.21
ICP-6M	6	4.1	25.0
ICP-8M	8	5.6	26.0
ICP-10M	10	7.1	27.1
ICP-12M	12	8.8	36.2
ICP-15M	15	11.2	37.8
ICP-16M	16	12.0	37.8
ICP-18M	18	13.9	37.8
ICP-20M	20	15.5	39.4
ICP-22M	22	16.1	38.97
ICP-25M	25	19.9	49.3
ICP-28M	28	22.5	63.5
ICP-32M	32	26.5	69.7
ICP-38M	38	31.6	81.9

ICPR REDUCING PORT CONNECTOR

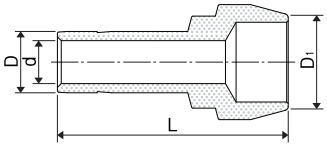

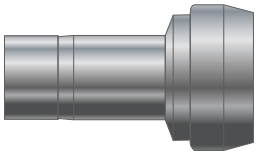

Connects Two Fractional i-LOK Tube Fitting Ports

Part No.	Tube O.D.				d min.	L
	D1		D			
	in	mm	in	mm		
ICPR2-1	1/8	3.17	1/16	1.59	0.76	18.3
ICPR4-1	1/4	6.35	1/16	3.17	0.76	19.05
ICPR4-2	1/4	6.35	1/8	3.17	2.03	22.86
ICPR6-2	3/8	9.52	1/8	3.17	2.03	23.37
ICPR6-4	3/8	9.52	1/4	6.35	4.32	25.4
ICPR8-4	1/2	12.70	1/4	6.35	4.32	29.72
ICPR8-6	1/2	12.70	3/8	9.52	6.86	30.73
ICPR12-8	3/4	19.05	1/2	12.70	9.4	37.85
ICPR16-8	1	25.40	1/2	12.70	9.4	42.93
ICPR16-12	1	25.40	3/4	19.05	14.73	43.69

Connects two Metric i-LOK Tube Fitting Ports

Part No.	Tube O.D.		d min.	L
	D1	D		
ICPR6M-3M	6	3	1.9	22.9
ICPR8M-6M	8	6	4.1	25.4
ICPR10M-6M	10	6	4.1	25.8
ICPR10M-8M	10	8	5.6	26.3
ICPR12M-6M	12	6	4.1	29.6
ICPR12M-8M	12	8	5.6	30.1
ICPR12M-10M	12	10	7.1	30.6
ICPR16M-6M	16	6	4.1	29.37
ICPR16M-12M	16	12	8.8	37.5
ICPR28M-25M	28	25	19.9	56.5
ICPR32M-25M	32	25	19.9	60.3
ICPR38M-25M	38	25	19.9	65.8

01 IFTC LAPPED FLANGE CONNECTOR

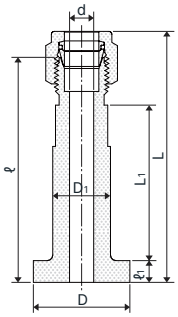



Flange Dimensions and Sealing-Face Finish

Part No.	Tube Size	Flange Seal	Dimension							Flange Surface Finish
			ℓ	ℓ1	L	L1	D	D1	d min.	
IFTC4-IM	1/4	IM	74.9	6.5	80.77	56.5	34.5	21.1	4.8	3.2-6.3 μm Ra
IFTC4-IE	1/4	IE	74.9	6.5	80.77	56.5	34.5	21.1	4.8	6.3-1.2 μm Ra
IFTC6-IM	3/8	IM	74.9	6.5	82.30	56.5	34.5	21.1	7.1	3.2-6.3 μm Ra
IFTC6-IE	3/8	IE	74.9	6.5	82.30	56.5	34.5	21.1	7.1	6.3-12.5 μm Ra
IFTC8-IM	1/2	IM	74.9	6.5	85.09	56.5	34.5	21.1	10.4	3.2-6.3 μm Ra
IFTC8-IE	1/2	IE	74.9	6.5	85.09	56.5	34.5	21.1	10.4	6.3-12.5 μm Ra

02 IFTC INTEGRAL ANSI FLANGE CONNECTOR

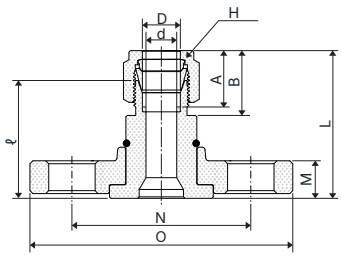



Connects Fractional Tubes

Part No. Raised Face Flange	Tube O.D. D	Flange NPS	ANSI Class	d	Width across flat h		A	B	M	N	ℓ	L	O
	in				in	mm							
IF8TF8-150	1/2	1/2	150	10.41	7/8	22.22	22.86	21.84	15.7	60.5	52.7	62.72	88.9
IF8TF8-300	1/2	1/2	300	10.41	7/8	22.22	22.86	21.84	22.4	66.5	62.2	72.22	95.3
IF12TF8-150	3/4	1/2	150	15.74	1-1/8	28.57	24.38	21.84	15.7	60.5	62.2	72.22	88.9
IF12TF8-300	3/4	1/2	300	15.00	1-1/8	28.57	24.38	21.84	22.4	66.5	62.2	72.22	95.3
IF12TF12-150	3/4	3/4	150	15.74	1-1/8	28.57	24.38	21.84	15.7	69.9	53.0	62.99	98.6
IF12TF12-300	3/4	3/4	300	15.74	1-1/8	28.57	24.38	21.84	25.4	82.6	62.2	72.22	117.3
IF12TF12-600	3/4	3/4	600	15.74	1-1/8	28.57	24.38	21.84	25.4	82.6	67.5	77.72	117.3
IF12TF16-150	3/4	1	150	15.74	1-1/8	28.57	24.38	21.84	17.5	79.2	54.3	64.29	108.0
IF12TF16-300	3/4	1	300	15.74	1-1/8	28.57	24.38	21.84	26.9	88.9	63.8	73.82	124.0
IF16TF12-150	1	3/4	150	20.00	1-1/2	38.1	31.24	26.41	15.7	69.9	54.9	69.07	98.6
IF16TF16-150	1	1	150	22.35	1-1/2	38.1	31.24	26.41	17.5	79.2	56.5	68.76	108.0
IF16TF16-300	1	1	300	22.35	1-1/2	38.1	31.24	26.41	26.9	88.9	66.0	78.26	124.0
IF16TF16-600	1	1	600	22.35	1-1/2	38.1	31.24	26.41	26.9	88.9	73.5	85.76	124.0
IF16TF24-300	1	1-1/2	300	22.35	1-1/2	38.1	31.24	26.41	30.2	114.3	73.0	85.26	155.4

Pressure-Temperature Ratings

Flange ratings per ASME B16.5, Material Group 2.2.

Working Pressure by Class, PSI

Temp. °F	ASME Class						
	150	300	400	600	900	1500	2500
-20 to 100	275	720	960	1440	2160	3600	6000
200	235	620	825	1240	1860	3095	5160
300	215	560	745	1120	1680	2795	4660
400	195	515	685	1025	1540	2570	4280
500	170	480	635	955	1435	2390	3980
600	140	450	600	900	1355	2255	3760
650	125	440	590	885	1325	2210	3680
700	110	435	580	870	1305	2170	3620
750	95	425	570	855	1280	2135	3560
800	80	420	565	845	1265	2110	3520
850	65	420	555	835	1255	2090	3480
900	50	415	555	830	1245	2075	3460
950	35	385	515	775	1160	1930	3220
1000	20	365	485	725	1090	1820	3030
1100	-	305	410	610	915	1525	2545

Working Pressure by Class, BAR

Temp. °C	ASME Class						
	150	300	400	600	900	1500	2500
-29 to 38	19.0	49.6	66.2	99.3	148.9	248.2	413.7
50	18.4	48.1	64.2	96.2	144.3	240.6	400.9
100	16.2	42.2	56.3	84.4	126.6	211.0	351.6
150	14.8	38.5	51.3	77.0	115.5	192.5	320.8
200	13.7	35.7	47.6	71.3	107.0	178.3	297.2
250	12.1	33.4	44.5	66.8	100.1	166.9	278.1
300	10.2	31.6	42.2	63.2	94.9	158.1	263.5
325	9.3	30.9	41.2	61.8	92.7	154.4	257.4
350	8.4	30.3	40.4	60.7	91.0	151.6	252.7
375	7.4	29.9	39.8	59.8	89.6	149.4	249.0
400	6.5	29.4	39.3	58.9	88.3	147.2	245.3
425	5.5	29.1	38.9	58.3	87.4	145.7	242.9
450	4.6	28.8	38.5	57.7	86.5	144.2	240.4
475	3.7	28.7	38.2	57.3	86.0	143.4	238.9
500	2.8	28.2	37.6	56.5	84.7	140.9	235.0
538	1.4	25.2	33.4	50.0	75.2	125.5	208.9
600	-	20.3	27.0	40.5	60.8	101.3	168.9

03 IUA AN UNION

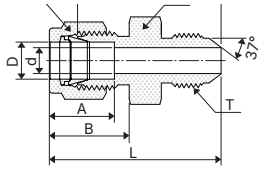

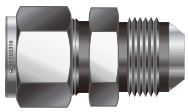

Connects Fractional Tube to AN Flare Tube

Part No.	Tube O.D. D		AN Tube Flare Size		Straight Thread T(U)	d min.	Width across flat				A	B	ℓ	L
							h		H					
	in	mm	in	mm			in	mm	in	mm				
IUA1-2	1/16	1.59	1/8	3.17	5/16-24	1.27	7/16	11.11	5/16	7.93	8.63	10.92	23.36	27.17
IUA2-2	1/8	3.17	1/8	3.17	5/16-24	1.52	7/16	11.11	7/16	11.11	12.70	15.24	24.89	31.49
IUA2-4	1/8	3.17	1/4	6.35	7/16-20	2.28	1/2	12.70	7/16	11.11	12.70	15.24	28.44	35.05
IUA4-4	1/4	6.35	1/4	6.35	7/16-20	4.31	1/2	12.70	9/16	14.28	15.24	17.78	30.22	37.59
IUA5-5	5/16	7.93	5/16	7.93	1/2-20	5.84	9/16	14.28	5/8	15.87	16.25	18.54	30.98	38.35
IUA6-4	3/8	9.52	1/4	6.35	7/16-20	4.31	5/8	15.87	11/16	17.46	16.76	19.30	32.25	39.62
IUA6-6	3/8	9.52	3/8	9.52	9/16-18	7.11	5/8	15.87	11/16	17.46	16.76	19.30	32.25	39.62
IUA8-8	1/2	12.70	1/2	12.70	3/4-16	9.90	13/16	20.64	7/8	22.22	22.86	21.84	35.81	45.97
IUA12-12	3/4	19.05	3/4	19.05	1-1/16-12	15.49	1-1/8	28.58	1-1/8	28.58	24.38	21.84	43.18	53.34
IUA16-16	1	25.40	1	25.40	1-5/16-12	21.33	1-3/8	34.92	1-1/2	38.10	31.24	26.41	49.27	61.46
IUA20-20	1-1/4	31.75	1-1/4	31.75	1-5/8-12	27.68	1-3/4	44.45	1-7/8	47.63	41.14	38.86	55.46	77.56
IUA24-24	1-1/2	38.10	1-1/2	38.10	1-7/8-12	34.03	2-1/8	53.97	2-1/4	57.15	50.03	45.21	63.07	90.25
IUA32-32	2	50.80	2	50.80	2-1/2-12	45.97	2-3/4	69.85	3	76.20	67.56	62.73	83.24	120.57

Connects Fractional Tube to AN Flare Tube

Part No.	Tube O.D. D		AN Tube Flare Size		Straight Thread T(U)	d min.	Width across flat				A	ℓ	ℓ1	L	L1	Panel Hole Drill Size	Panel Max. Thickness
							h		H								
	in	mm	in	mm			in	mm	in	mm							
IUBA2-2	5	3.17	1/8	3.17	5/16-24	1.77	1/2	12.70	7/16	11.11	13.71	40.58	24.63	47.45	31.23	8.33	12.70
IUBA4-4	1/4	6.35	1/4	6.35	7/16-20	4.31	5/8	15.87	9/16	14.28	15.24	46.48	26.16	53.84	33.52	11.50	10.16
IUBA6-6	3/8	9.52	3/8	9.52	9/16-18	7.11	3/4	19.05	11/16	17.46	16.76	49.78	29.46	57.15	36.83	14.68	11.17
IUBA8-8	1/2	12.70	1/2	12.70	3/4-16	9.90	15/16	23.81	7/8	22.22	22.86	55.62	31.75	65.78	41.91	19.44	12.70
IUBA12-12	3/4	19.05	3/4	19.05	1-1/16-12	15.49	1-3/16	30.16	1-1/8	28.58	24.38	68.83	37.33	78.99	47.49	25.79	16.76
IUBA16-16	1	25.40	1	25.40	1-5/16-12	21.33	1-5/8	41.27	1-1/2	38.10	31.24	80.26	45.21	92.45	57.40	33.73	19.05
IUBA20-20	1-1/4	31.75	1-1/4	31.75	1-5/8-12	27.68	1-7/8	47.63	1-7/8	47.63	41.14	86.37	47.75	108.47	69.85	41.67	19.05
IUBA24-24	1-1/2	38.10	1-1/2	38.10	1-7/8-12	34.03	2-1/4	57.15	2-1/4	57.15	50.03	94.33	49.27	121.51	76.45	49.61	19.05
IUBA32-32	2	50.80	2	50.80	2-1/2-12	45.97	2-3/4	69.85	3	76.20	67.56	114.29	56.38	151.62	93.71	16.27	19.05

Connects Fractional i-LOK Tube Fitting Port to AN Male Thread

Part No.	Tube O.D. D		AN Tube Flare Size		Straight Thread T(U)	Width across flat				A	ℓ	ℓ1
						h		H				
	in	mm	in	mm		in	mm	in	mm			
IAA2-2	1/8	3.17	1/8	3.17	5/16-24	3/8	9.52	7/16	11.11	13.71	13.46	18.54
IAA2-4	1/8	3.17	1/4	6.35	7/16-20	9/16	14.28	7/16	11.11	15.74	13.46	19.05
IAA4-4	1/4	6.35	1/4	6.35	7/16-20	9/16	14.28	9/16	14.28	15.74	15.74	21.33
IAA6-6	3/8	9.52	3/8	9.52	9/16-18	11/16	17.46	11/16	17.46	18.28	17.52	24.89
IAA8-8	1/2	12.70	1/2	12.70	3/4-16	7/8	22.22	7/8	22.22	21.59	23.11	31.75

04 IMC-U NON-POSITIONABLE SAE MALE CONNECTOR

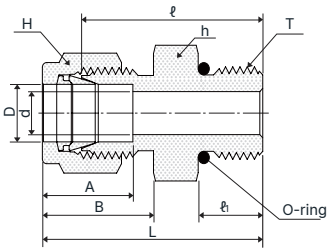

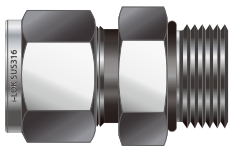

Connects Fractional Tube to SAE Straight Thread Boss

Part No.	Tube O.D. D		Straight Thread T(U)	d min.	Width across flat				A	B	ℓ	ℓ1	L	O-ring Uniform Size Number
					h		H							
	in	mm			in	mm	in	mm						
IMC2-2U	1/8	3.17	5/16-24	2.28	7/16	11.11	7/16	11.11	12.70	15.24	23.26	7.62	29.97	-902
IMC2-4U	1/8	6.35	7/16-20	2.28	9/16	14.28	7/16	11.11	12.70	15.24	24.89	9.14	31.49	-904
IMC4-4U	1/4	6.35	7/16-20	4.82	9/16	14.28	9/16	14.28	15.24	17.78	26.67	9.14	34.03	-904
IMC4-6U	1/4	6.35	9/16-18	4.82	11/16	17.46	9/16	14.28	15.24	17.78	28.19	9.90	35.56	-906
IMC4-8U	1/4	6.35	3/4-16	4.82	7/8	22.22	9/16	14.28	15.24	17.78	30.22	11.17	37.59	-908
IMC4-10U	1/4	6.35	7/8-14	4.82	1	25.40	9/16	14.28	15.24	17.78	33.27	12.70	40.64	-910
IMC5-5U	5/16	7.93	1-2/20	5.84	5/8	15.87	5/8	15.87	16.25	18.54	27.43	9.14	34.79	-905
IMC6-4U	3/8	9.52	7/16-20	5.08	5/8	15.87	11/16	17.46	16.76	19.30	28.19	9.14	35.56	-904
IMC6-6U	3/8	9.52	9/16-18	7.11	11/16	17.46	11/16	17.46	16.76	19.30	29.71	9.90	37.08	-906
IMC6-8U	3/8	9.52	3/4-16	7.11	7/8	22.22	11/16	17.46	16.76	19.30	31.75	11.17	39.11	-908
IMC6-10U	3/8	9.52	7/8-14	7.11	1	25.40	11/16	17.46	16.76	19.30	34.79	12.70	42.16	-910
IMC8-6U	1/2	12.70	9/16-18	7.11	13/16	20.64	7/8	22.22	22.86	21.84	28.95	9.90	39.11	-906
IMC8-8U	1/2	12.70	3/4-16	10.41	7/8	22.22	7/8	22.22	22.86	21.84	31.75	11.17	41.91	-908
IMC8-10U	1/2	12.70	7/8-14	10.41	1	25.40	7/8	22.22	22.86	21.84	34.79	12.70	44.95	-910
IMC8-12U	1/2	12.70	1-1/16-12	10.41	1-1/4	31.75	7/8	22.22	22.86	21.84	38.86	14.98	49.02	-912
IMC10-8U	5/8	15.87	3/4-16	10.66	15/16	23.81	1	25.40	24.38	21.84	31.75	11.17	41.91	-908
IMC10-10U	5/8	15.87	7/8-14	12.70	1	25.40	1	25.40	24.38	21.84	35.05	12.70	45.21	-910
IMC12-8U	3/4	19.05	3/4-16	10.66	1-1/16	26.98	1-1/8	28.57	24.38	21.84	35.81	11.17	45.97	-908
IMC12-12U	3/4	19.05	1-1/16-12	15.74	1-1/4	31.75	1-1/8	28.57	24.38	21.84	38.86	14.98	49.02	-912
IMC14-14U	7/8	22.22	1-3/16-12	18.28	1-3/8	34.92	1-1/4	31.75	25.90	21.84	38.86	14.98	49.02	-914
IMC16-12U	1	25.40	1-1/16-12	16.76	1-3/8	34.92	1-1/2	38.10	31.24	26.41	41.14	14.98	53.54	-912
IMC16-16U	1	25.40	1-5/16-12	22.35	1-1/2	38.10	1-1/2	38.10	31.24	26.41	42.16	14.98	54.35	-916
IMC20-20U	1-1/4	31.75	1-5/8-12	27.68	1-7/8	47.63	1-7/8	47.63	41.14	38.86	46.22	14.98	68.32	-920
IMC24-24U	1-1/2	38.10	1-7/8-12	34.03	2-1/8	53.98	2-1/4	57.15	50.03	45.21	50.54	14.98	77.72	-924
IMC32-32U	2	50.80	2-1/2-12	45.97	2-3/4	69.85	3	76.20	67.56	62.73	64.26	14.98	101.60	-932

05 IMC-UO O-SEAL SAE MALE CONNECTOR

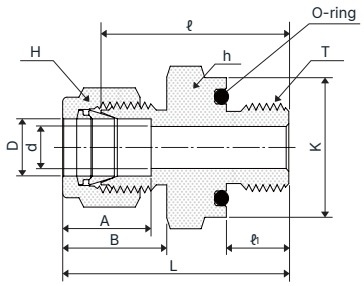

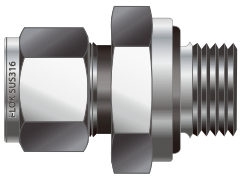

Connects Fractional Tube to Female Straight Thread

Part No.	Tube O.D. D		Straight Thread T(U)	d min.	Width across flat				A	B	ℓ	ℓ1	L	K	O-ring Uniform Size Number
					h		H								
	in	mm			in	mm	in	mm							
IMC2-2UO	1/8	3.17	5/16-20	2.28	9/16	14.28	7/16	11.11	12.70	15.24	26.61	8.63	32.76	13.97	-011
IMC3-3UO	3/16	4.76	3/8-24	3.04	5/8	15.87	1/2	12.70	13.71	16.00	27.68	9.65	34.29	15.73	-012
IMC4-4UO	1/4	6.35	7/16-20	4.82	3/4	19.05	9/16	14.28	15.24	17.78	30.98	10.41	38.35	18.80	-111
IMC5-5UO	5/16	7.93	1/2-20	6.35	7/8	22.22	5/8	15.87	16.25	18.54	33.27	11.17	40.64	21.84	-112
IMC6-6UO	3/8	9.52	9/16-18	7.11	15/16	23.81	11/16	17.46	16.76	19.30	35.05	11.93	42.41	23.62	-113
IMC8-8UO	1/2	12.70	3/4-16	10.41	1-1/8	28.57	7/8	22.22	22.86	21.84	35.81	11.93	45.97	28.45	-116
IMC12-12UO	3/4	19.05	1-1/16-12	15.74	1-1/2	38.10	1-1/8	28.58	24.38	21.84	42.16	14.22	52.32	37.85	-215
IMC16-16UO	1	25.40	1-5/16-12	22.35	1-3/4	44.45	1-1/2	38.10	31.24	26.41	45.97	14.22	58.16	44.20	-219

Connects Fractional Tube to Female NPT Thread

Part No.	Tube O.D. D		T *(NPT)	d min.	Width across flat				A	B	ℓ	ℓ1	L	K	O-ring Uniform Size Number
					h		H								
	in	mm			in	mm	in	mm							
IMC2-2NO	1/8	3.17	1/8	2.28	3/4	19.05	7/16	11.11	12.70	15.24	26.16	7.11	32.76	18.80	-111
IMC4-2NO	1/4	6.35	1/8	4.82	3/4	19.05	9/16	14.28	15.24	17.78	27.68	7.11	35.05	18.80	-111
IMC4-4NO	1/4	6.35	1/4	4.82	15/16	23.81	9/16	14.28	15.24	17.78	30.98	9.65	38.35	23.62	-113
IMC6-4NO	3/8	9.52	1/4	7.11	15/16	23.81	11/16	17.46	16.76	19.30	32.51	9.65	39.87	23.62	-113
IMC6-6NO	3/8	9.52	3/8	7.11	1-1/8	28.58	11/16	17.46	16.76	19.30	34.03	10.41	41.40	28.45	-116
IMC6-8NO	3/8	9.52	1/2	7.11	1-5/16	33.33	11/16	17.46	16.76	19.30	39.62	13.46	46.99	33.02	-212
IMC8-8NO	1/2	12.70	1/2	10.41	1-5/16	33.33	7/8	22.22	22.86	21.84	39.62	13.46	49.78	33.02	-212

06 ILBS-UP POSITIONABLE 45° SAE MALE ELBOW

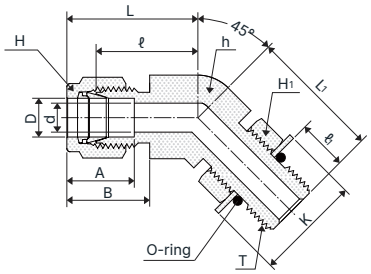

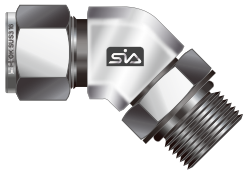

Connects Fractional Tube to SAE Straight Thread

Part No.	Tube O.D. D		Straight Thread T(U)	d min.	Width across flat						A	B	ℓ	ℓ1	L	L1	K	O-ring Uniform Size Number
					h		H		H1									
	in	mm			in	mm	in	mm	in	mm								
ILBS4-4UP	1/4	6.35	7/16-20	4.82	1/2	12.70	9/16	14.28	9/16	14.28	15.24	17.78	18.28	9.90	25.65	25.65	16.51	-904
ILBS6-6UP	3/8	9.52	9/16-18	7.11	5/8	15.87	11/16	17.46	11/16	17.46	16.76	19.30	20.57	11.17	27.94	28.19	20.06	-906
ILBS8-8UP	1/2	12.70	3/4-16	10.41	13/16	20.64	7/8	22.22	7/8	22.22	22.86	21.84	21.84	12.70	32.00	32.25	25.65	-908
ILBS12-12UP	3/4	19.05	1-1/16-12	15.74	1-1/8	28.58	1-1/8	28.58	1-1/4	31.75	24.38	21.84	29.71	16.76	39.87	47.24	36.57	-912
ILBS16-16UP	1	25.40	1-5/16-12	22.35	1-3/8	34.92	1-1/2	38.10	1-1/2	38.10	31.24	26.41	35.30	16.76	47.49	50.54	43.94	-916

Connects Fractional Tube to Female ISO Parallel Thread

Part No.	Tube O.D. D	T G(PF)	d min.	Width across flat			A	B	ℓ	ℓ1	L	L1	K	O-ring Uniform Size Number
				h	H1	H								
ILM6M-2GP	6	1/8	4.0	12.7	14.2	14	15.3	17.7	19.6	8.1	27.0	26.4	15.0	P8
ILM6M-4GP	6	1/4	4.8	15.8	19.1	15	15.3	17.7	21.6	9.1	29.0	32.3	20.2	-111
ILM8M-2GP	8	1/8	4.0	14.2	14.2	16	16.2	18.6	21.3	8.1	28.8	27.4	15.0	P8
ILM8M-4GP	8	1/4	5.9	15.8	19.1	16	16.2	18.6	22.4	9.1	29.9	32.2	20.2	-111
ILM10M-4GP	10	1/4	5.9	20.6	19.1	19	172	19.5	25.9	9.1	33.5	35.0	20.2	-113
ILM10M-6GP	10	3/8	7.9	20.6	22.2	19	17.2	19.5	25.9	9.4	33.5	37.1	23.5	-111
ILM12M-4GP	12	1/4	5.9	20.6	19.1	22	22.8	22.0	25.9	9.1	36.0	35.0	20.2	-113
ILM12M-6GP	12	3/8	7.9	20.6	22.2	22	22.8	22.0	25.9	9.4	36.0	37.1	23.5	-113
ILM12M-8GP	12	1/2	9.5	23.8	26.9	22	22.8	22.0	25.9	13.0	38.0	43.4	34.5	P18
ILM12M-12GP	12	3/4	9.5	26.9	34.9	22	22.8	22.0	29.7	13.0	39.8	48.8	43.5	-119

07 ILS-UP POSITIONABLE SAE MALE ELBOW

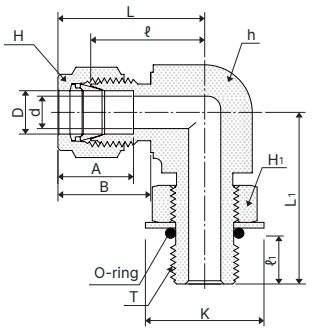



Connects Fractional Tube to SAE Straight Thread

Part No.	Tube O.D. D		Straight Thread T(U)	d min.	Width across flat						A	B	ℓ	ℓ1	L	L1	K	O-ring Uniform Size Number
					h		H		H1									
	in	mm			in	mm	in	mm	in	mm								
ILS4-4UP	1/4	6.35	7/16-20	4.82	1/2	12.70	9/16	14.28	9/16	14.28	15.24	17.78	21.08	9.90	28.44	28.44	16.51	-904
ILS5-5UP	5/16	7.93	1/2-20	5.84	9/16	14.28	5/8	15.87	5/8	15.87	16.25	18.54	22.86	9.90	30.22	29.46	18.28	-905
ILS6-6UP	3/8	9.52	9/16-18	7.11	5/8	15.87	11/16	17.46	11/16	17.46	16.76	19.30	24.63	11.17	32.00	32.25	20.06	-906
ILS6-8UP	3/8	9.52	3/4-16	7.11	13/16	20.64	11/16	17.46	7/8	22.22	16.76	19.30	27.43	12.70	34.79	37.84	25.65	-908
ILS8-8UP	1/2	12.70	3/4-16	10.41	13/16	20.64	7/8	22.22	7/8	22.22	22.86	21.84	27.43	12.70	37.59	37.84	25.65	-908
ILS10-10UP	5/8	15.87	7/8-14	12.70	1	25.40	1	25.40	1	25.40	24.38	21.84	29.46	14.22	39.62	43.43	29.46	-910
ILS12-12UP	3/4	19.05	1-1/16-12	15.74	1-1/16	26.98	1-1/8	28.57	1-1/4	31.75	24.38	21.84	31.24	16.76	41.40	48.76	36.57	-912
ILS14-14UP	7/8	22.22	1-3/16-12	18.28	1-1/4	31.75	1-1/4	31.75	1-3/8	34.92	25.90	21.84	33.02	16.76	43.18	50.54	40.38	-914
ILS16-16Up	1	25.40	1-5/16-12	22.35	1-3/8	34.92	1-1/2	38.10	1-1/2	38.10	31.24	26.41	38.35	16.76	50.54	53.59	43.94	-916
ILS20-20UP	1-1/4	31.75	1-5/8/12	27.68	1-11/16	42.76	1-7/8	47.63	1-7/8	47.63	41.14	38.86	45.72	16.76	67.81	58.16	54.86	-920
ILS24-24UP	1-1/2	38.10	1-7/8-12	34.03	2	50.80	2-1/4	57.15	2-1/8	53.98	50.03	45.21	50.80	16.76	77.97	60.45	62.23	-924
ILS32-32UP	2	50.80	2-1/2-12	45.97	2-3/4	69.85	3	76.20	2-3/4	69.85	67.56	62.73	69.85	16.76	107.18	71.62	80.26	-932

Connects Fractional Tube to SAE Straight Thread

Part No.	Tube O.D. D		Straight Thread T(U)	d min.	Width across flat						A	B	ℓ	ℓ1	L	L1	K	O-ring Uniform Size Number
					h		H		H1									
	in	mm			in	mm	in	mm	in	mm								
ITRS4-4UP	1/4	6.35	7/16-20	4.82	1/2	12.70	9/16	14.28	9/16	14.28	15.24	17.78	21.08	9.90	28.44	28.44	16.51	-904
ITRS6-6UP	3/8	9.52	9/16-18	7.11	5/8	15.87	11/16	17.46	11/16	17.46	16.76	19.30	24.63	11.17	32.00	32.25	20.06	-906
ITRS8-8UP	1/2	12.70	3/4-16	10.41	13/16	20.64	7/8	22.22	7/8	22.22	22.86	21.84	27.43	12.70	37.59	37.84	25.65	-908
ITRS12-12UP	3/4	19.05	1-1/16-12	15.74	1-1/16	26.98	1-1/8	28.58	1-1/4	31.75	24.38	21.84	31.24	16.76	41.40	45.50	36.57	-912
ITRS16-16UP	1	25.40	1-5/16-12	22.35	1-3/8	34.92	1-1/2	38.10	1-1/2	38.10	31.24	26.41	38.35	16.76	50.54	53.59	43.94	-916
ITRS20-20UP	1-1/4	31.75	1-5/8-12	27.68	1-11/16	42.86	1-7/8	47.63	1-7/8	47.63	41.14	38.86	45.72	16.76	67.81	58.16	54.86	-920
ITRS24-24UP	1-1/2	38.10	1-7/8-12	34.03	2	50.80	2-1/4	57.15	2-1/8	53.98	50.03	45.21	50.80	16.76	77.97	60.45	62.23	-924
ITRS32-32UP	2	50.80	2-1/2-12	45.97	2-3/4	69.85	3	76.20	2-3/4	69.85	67.56	62.73	69.85	16.76	107.18	71.62	80.26	-932

08 ITBS-UP POSITIONABLE SAE MALE BRANCH TEE

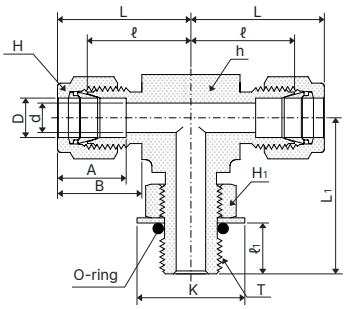

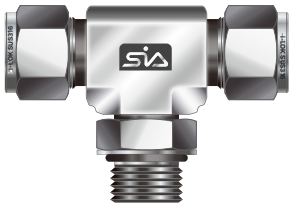

Connects Fractional Tube to SAE Straight Thread Boss

Part No.	Tube O.D. D		Straight Thread T(U)	d min.	Width across flat						A	B	ℓ	ℓ1	L	L1	K	O-ring Uniform Size Number
					h		H		H1									
	in	mm			in	mm	in	mm	in	mm								
ITBS4-4UP	1/4	6.35	7/16-20	4.82	1/2	12.70	9/16	14.28	9/16	14.28	15.24	17.78	21.08	9.90	28.44	28.44	16.51	-904
ITBS6-6UP	3/8	9.52	9/16-18	7.11	5/8	15.87	11/16	17.46	11/16	17.46	16.76	19.30	24.63	11.17	32.00	32.25	20.06	-906
ITBS8-8UP	1/2	12.70	3/4-16	10.41	13/16	20.64	7/8	22.22	7/8	22.22	22.86	21.84	27.43	12.70	37.59	37.84	25.65	-908
ITBS12-12UP	3/4	19.05	1-1/16-12	15.74	1-1/16	26.98	1-1/8	28.58	1-1/4	31.75	24.38	21.84	31.24	16.76	41.40	48.76	36.57	-912
ITBS16-16UP	1	25.40	1-5/16-12	22.35	1-3/8	34.92	1-1/2	38.10	1-1/2	38.10	31.24	26.41	38.35	16.76	50.54	53.59	43.94	-916
ITBS20-20UP	1-1/4	31.75	1-5/8/12	27.68	1-11/16	42.86	1-7/8	47.63	1-7/8	47.63	41.14	38.86	45.72	16.76	67.81	58.16	54.86	-920
ITBS24-24UP	1-1/2	38.10	1-7/8-12	34.03	2	50.80	2-1/4	57.15	2-1/8	53.98	50.03	45.21	50.80	16.76	77.97	60.45	62.23	-924
ITBS32-32UP	2	50.80	2-1/2-12	45.97	2-3/4	69.85	3	76.20	2-3/4	69.85	67.56	62.73	69.85	16.76	107.18	71.62	80.26	-932

01 ICSW TUBE SOCKET WELD CONNECTOR

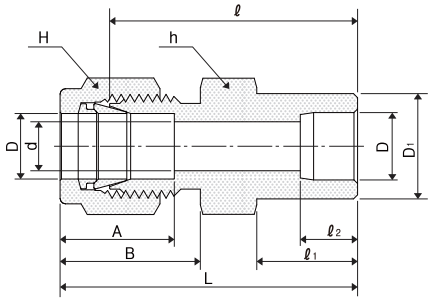

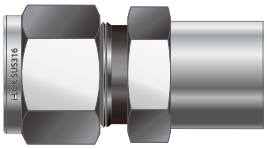

Connects Fractional Tubes

Part No.	Tube O.D. D		d min.	D_1	Width across flat				A	B	ℓ	$ℓ_1$	$ℓ_2$	L
					h		H							
	in	mm			in	mm	in	mm						
ICSW2-2	1/8	3.17	2.28	7.87	7/16	11.11	7/16	11.11	12.70	15.24	22.35	8.63	6.35	28.95
ICSW4-4	1/4	6.35	4.82	11.17	1/2	12.70	9/16	14.28	15.24	17.78	26.16	10.41	7.87	33.52
ICSW6-6	3/8	9.52	7.11	15.74	5/8	15.87	11/16	17.46	16.76	19.30	30.22	11.93	9.65	37.59
ICSW8-8	1/2	12.70	10.41	19.05	13/16	20.64	7/8	22.22	22.86	21.84	30.98	11.93	12.70	41.14
ICSW12-12	3/4	19.05	15.74	26.67	1-1/16	26.98	1-1/8	28.58	24.38	21.84	33.27	11.93	14.22	43.43
ICSW16-16	1	25.40	22.35	33.27	1-3/8	34.92	1-1/2	38.10	31.24	26.41	40.38	14.22	19.05	52.57

02 ILSW TUBE SOCKET WELD ELBOW

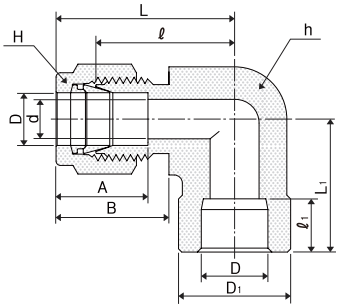



Connects Fractional Tubes

Part No.	Tube O.D. D		d min.	D_1	Width across flat				A	B	ℓ	$ℓ_1$	L	L_1
					h		H							
	in	mm			in	mm	in	mm						
ILSW4-4	1/4	6.35	4.82	12.70	1/2	12.70	9/16	14.28	15.24	17.78	19.60	7.87	26.90	19.60
ILSW6-6	3/8	9.52	7.11	15.74		17.0	11/16	17.46	16.76	19.30	23.10	9.65	30.40	23.10
ILSW8-8	1/2	12.70	10.41	20.57	13/16	20.64	7/8	22.22	22.86	21.84	25.90	12.70	36.0	25.90
ILSW12-12	3/4	19.05	15.74	26.92	1-1/16	26.98	1-1/8	28.58	24.38	21.84	29.70	14.22	39.80	29.70
ILSW16-16	1	25.40	22.35	35.05		36.0	1-1/2	38.10	31.24	26.41	36.80	19.05	48.97	36.80

01 ICBW PIPE BUTT WELD CONNECTOR

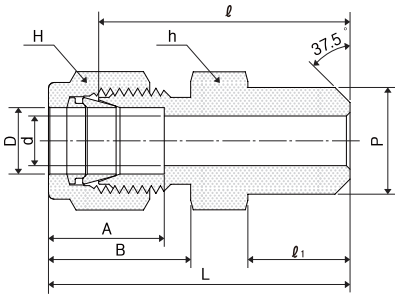

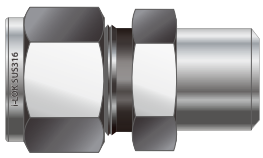

Connects Fractional Tube to Pipe

Part No.	Tube O.D. D		Male Pipe Size P		d min.	Width across flat h		H		A	B	ℓ	ℓ1	L
	in	mm	Nom	O.D.		in	mm	in	mm					
ICBW2-2P	1/8	3.17	1/8	10.29	2.28	7/16	11.11	7/16	11.11	12.70	15.24	23.87	9.65	31.24
ICBW3-2P	3/16	4.76	1/8	10.29	3.04	7/16	11.11	1/2	12.70	13.71	16.00	24.63	9.65	31.24
ICBW4-2P	1/4	6.35	1/8	10.29	4.82	1/2	12.70	9/16	14.28	15.24	17.78	25.40	9.65	32.76
ICBW4-4P	1/4	6.35	1/4	13.72	4.82	9/16	14.28	9/16	14.28	15.24	17.78	30.48	14.22	37.84
ICBW5-2P	5/16	7.93	1/8	10.29	5.08	9/16	14.28	5/8	15.87	16.25	18.54	26.67	9.65	34.03
ICBW5-4P	5/16	7.93	1/4	13.72	6.35	9/16	14.28	5/8	15.87	16.25	18.54	31.24	14.22	38.60
ICBW6-4P	3/8	9.52	1/4	13.72	7.11	5/8	15.87	11/16	17.46	16.76	19.30	32.51	14.22	39.87
ICBW6-6P	3/8	9.52	3/8	17.15	7.11	11/16	17.46	11/16	17.46	16.76	19.30	32.51	14.22	39.87
ICBW6-8P	3/8	9.52	1/2	21.34	7.11	7/8	22.22	11/16	17.46	16.76	19.30	38.86	11.05	43.23
ICBW6-12P	3/8	9.52	3/4	26.67	7.11	1-1/16	26.98	11/16	17.26	16.76	19.30	40.38	19.05	47.75
ICBW8-6P	1/2	12.70	3/8	17.15	10.41	13/16	20.64	7/8	22.22	22.86	21.84	33.27	14.22	43.43
ICBW8-8P	1/2	12.70	1/2	21.34	10.41	7/8	22.22	7/8	22.22	22.86	21.84	38.86	19.05	49.02
ICBW8-12P	1/2	12.70	3/4	26.67	10.41	1-1/16	26.98	7/8	22.22	22.86	21.84	40.38	19.05	50.54
ICBW10-8P	5/8	15.87	1/2	21.34	12.70	15/16	23.81	1	25.40	24.38	21.84	38.86	19.05	49.02
ICBW12-12P	3/4	19.05	3/4	26.67	15.74	1-1/16	26.98	1-1/8	28.58	24.38	21.84	40.38	19.05	50.54
ICBW16-16P	1	25.40	1	33.40	22.35	1-3/8	34.92	1-1/2	38.10	31.24	26.41	50.03	23.87	62.23
ICBW20-20P	1-1/4	31.75	1-1/4	42.16	27.68	1-3/4	44.45	1-7/8	47.62	41.14	38.86	55.11	23.87	77.21
ICBW24-24P	1-1/2	38.10	1-1/2	48.26	34.03	2-1/8	53.98	2-1/4	57.15	50.03	45.21	61.72	26.16	88.90
ICBW32-32P	2	50.80	2	60.33	47.75	2-3/4	69.85	3	76.20	67.56	62.73	76.20	26.92	113.53

Connects Metric Tube to Pipe

Part No.	Tube O.D. D	Male Pipe Size P		d min.	Width across flat h	H	A	B	ℓ	ℓ1	L
		Nom	O.D.								
ICBW3M-2P	3	1/8	10.29	2.4	12	12	12.9	15.3	23.9	9.7	29.7
ICBW4M-2P	4	1/8	10.29	2.4	12	12	13.7	16.1	24.6	9.7	30.7
ICBW6M-2P	6	1/8	10.29	4.8	14	14	15.3	17.7	25.4	9.7	32.8
ICBW6M-4P	6	1/4	13.72	4.8	14	14	15.3	17.7	30.2	14.2	37.6
ICBW8M-2P	8	1/8	10.29	5.1	14	16	16.2	18.6	26.7	9.7	34.2
ICBW8M-4P	8	1/4	13.72	6.3	14	16	16.2	18.6	31.2	14.2	38.7
ICBW8M-8P	8	1/2	21.34	6.3	22	16	16.2	18.6	38.1	19.0	44.8
ICBW10M-4P	10	1/4	13.72	7.1	17	19	17.2	19.5	33.3	14.2	40.9
ICBW10M-6P	10	3/8	17.15	7.9	19	19	17.2	19.5	33.3	14.2	40.1
ICBW10M-8P	10	1/2	21.34	7.9	22	19	17.2	19.5	38.1	19.0	45.7
ICBW12M-4P	12	1/4	13.72	7.1	22	22	22.8	22.0	33.3	14.2	43.4
ICBW12M-6P	12	3/8	17.15	9.5	22	22	22.8	22.0	33.3	14.2	43.4
ICBW12M-8P	12	1/2	21.34	9.5	22	22	22.8	22.0	38.1	19.0	48.2
ICBW14M-6P	14	3/8	17.15	10.3	24	25	24.4	22.0	34.0	14.2	44.1
ICBW15M-8P	15	1/2	21.34	11.9	24	25	24.4	22.0	38.9	19.0	49.0
ICBW16M-8P	16	1/2	21.34	12.7	24	25	24.4	22.0	38.9	19.0	49.0
ICBW18M-8P	18	1/2	21.34	13.5	27	30	24.4	22.0	40.4	19.0	50.5
ICBW32M-20P	32	1-1/4	42.16	28.6	46	50	42.0	41.6	56.6	23.9	79.6
ICBW38M-24P	38	1-1/2	48.26	33.7	55	60	49.4	47.9	64.0	26.2	91.6

01 ILW PIPE BUTT WELD ELBOW

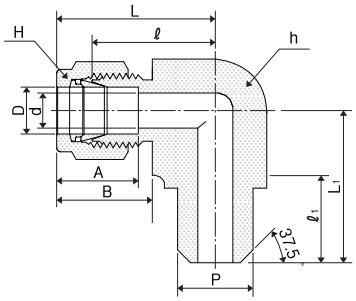



Connects Fractional Tube to Pipe

Part No.	Tube O.D. D		Pipe Size (ANSI) P		d min.	Width across flat h		Width across flat H		A	B	ℓ	ℓ_1	L	L_1
	in	mm	Nom	O.D.		in	mm	in	mm						
ILW2-2P	1/8	3.17	1/8	10.29	2.28	1/2	12.70	7/16	11.11	15.24	17.78	18.1	9.65	24.7	19.0
ILW4-4P	1/4	6.35	1/4	13.72	4.82	1/2	12.70	9/16	14.28	15.24	17.78	19.60	14.22	26.9	23.5
ILW6-4P	3/8	9.52	1/4	13.72	7.11		17.0	11/16	17.46	16.76	19.30	23.1	14.22	30.4	25.40
ILW8-8P	1/2	12.70	1/2	21.34	10.41	7/8	22.22	7/8	22.22	22.86	21.84	25.90	19.05	36.0	33.0
ILW12-12P	3/4	19.05	3/4	26.67	15.74	1-1/16	26.98	1-1/8	28.58	24.38	21.84	29.7	19.05	39.8	36.8
ILW16-16P	1	25.4	1	33.4	22.4	-	30	1-1/2	38.1	31.25	26.47	31.25	23.9	49	46.4

02 IBUW BULKHEAD UNION

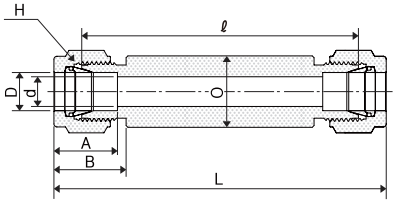



Connects Fractional Tubes

Part No.	Tube O.D. D		d min.	O Diameter	Width across flat H		A	B	ℓ	L
	in	mm			in	mm				
IBUW-4	1/4	6.35	4.82	14.0	9/16	14.28	15.24	17.78	80.0	115.4
IBUW-6	3/8	9.52	7.11	19.0	11/16	17.46	16.76	19.30	80.0	118.4
IBUW-8	1/2	12.70	10.41	23.0	7/8	22.22	22.86	21.84	80.0	124.0

ℓ and L dimensions are for reference only.

01 IC CAP FOR TUBE END

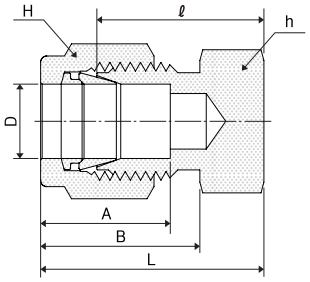

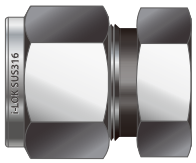

Cap Fractional Tube End

Part No.	Tube O.D. D		Width across flat				A	B	ℓ	L
			h		H					
	in	mm	in	mm	in	mm				
IC-1	1/16	1.59	5/16	7.93	5/16	7.93	8.63	10.92	11.20	14.28
IC-2	1/8	3.17	7/16	11.11	7/16	11.11	12.70	15.14	13.46	20.06
IC-3	3/16	4.76	7/16	11.11	1/2	12.70	13.71	16.00	14.73	21.33
IC-4	1/4	6.35	1/2	12.70	9/16	14.28	15.24	17.78	16.00	23.26
IC-5	5/16	7.93	9/16	14.28	5/8	15.87	16.25	18.54	17.01	24.38
IC-6	3/8	9.52	5/8	15.87	11/16	17.46	16.76	19.30	18.28	25.65
IC-8	1/2	12.70	13/16	20.63	7/8	22.22	22.86	21.84	19.05	29.21
IC-10	5/8	15.87	15/16	23.81	1	25.40	24.38	21.84	19.81	29.97
IC-12	3/4	19.05	1-1/16	26.98	1-1/8	28.57	24.38	21.84	21.33	31.49
IC-14	7/8	22.22	1-3/16	30.16	1-1/4	31.75	25.90	21.84	23.87	34.03
IC-16	1	25.40	1-3/8	34.92	1-1/2	38.10	31.24	26.41	26.16	38.35
IC-20	1-1/4	31.75	1-3/4	44.45	1-7/8	47.63	41.14	38.86	31.24	53.34
IC-24	1-1/2	38.10	2-1/8	53.98	2-1/4	57.15	50.15	45.21	37.33	64.51
IC-32	2	50.80	2-3/4	69.85	3	76.20	67.56	62.73	49.27	86.61

Cap Metric Tube End

Part No.	Tube O.D. D	Width across flat		A	B	ℓ	L
		h	H				
IC-2M	2	12	12	12.9	15.3	13.5	20.1
IC-3M	3	12	12	12.9	15.3	13.5	20.1
IC-4M	4	12	12	13.7	16.1	14.7	21.3
IC-6M	6	14	14	15.3	17.7	15.7	23.1
IC-8M	8	14	16	16.2	18.6	17.0	24.5
IC-10M	10	17	19	17.2	19.5	19.0	26.6
IC-12M	12	22	22	22.8	22.0	19.0	29.1
IC-15M	15	24	25	24.4	22.0	19.8	29.9
IC-16M	16	24	25	24.4	22.0	19.8	29.9
IC-18M	18	27	30	24.4	22.0	21.3	31.4
IC-20M	20	30	32	26.0	22.0	23.9	34.0
IC-22M	22	30	32	26.0	22.0	23.9	34.0
IC-25M	25	35	38	31.3	26.5	26.2	38.5
IC-28M	28	41	46	36.6	36.6	27.7	48.5
IC-32M	32	46	50	42.0	41.6	32.8	55.8
IC-38M	38	55	60	49.4	47.9	37.8	65.4

01 IP PORT PLUG

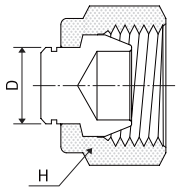



Plugs Fractional i-LOK Tube Fitting Port

Part No.	Tube O.D. D		Width across flat H	
	in	mm	in	mm
IP-1	1/16	1.59	5/16	7.93
IP-2	1/8	3.17	7/16	11.11
IP-3	3/16	4.76	1/2	12.70
IP-4	1/4	6.35	9/16	14.28
IP-5	5/16	7.93	5/8	15.87
IP-6	3/8	9.52	11/16	17.46
IP-8	1/2	12.70	7/8	22.22
IP-10	5/8	15.87	1	25.40
IP-12	3/4	19.05	1-1/8	28.58
IP-14	7/8	22.22	1-1/4	31.75
IP-16	1	25.40	1-1/2	38.10
IP-20	1-1/4	31.75	1-7/8	47.63
IP-24	1-1/2	38.10	2-1/4	57.15
IP-32	2	50.80	3	76.20

Plugs Metric i-LOK Tube Fitting Port

Part No.	Tube O.D. D	Width across flat H
IP-2M	2	12
IP-3M	3	12
IP-4M	4	12
IP-6M	6	14
IP-8M	8	16
IP-10M	10	19
IP-12M	12	22
IP-15M	15	25
IP-16M	16	25
IP-18M	18	30
IP-20M	20	32
IP-22M	22	32
IP-25M	25	38
IP-28M	28	46
IP-32M	32	50
IP-38M	38	60

02 II INSERT

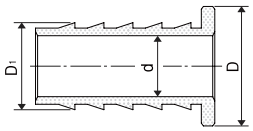

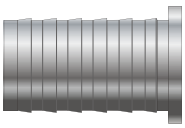

Fractional Nylon or Soft Plastic Tubing

Part No.	Tube O.D. D		Tube I.D. D_1		Bore I.D. d
	in	mm	in	mm	
II3-2	3/16	4.76	1/8	3.17	1.70
II4-2	1/4	6.35	1/8	3.17	1.70
II4-4.3M	1/4	6.35	0.17	4.32	3.10
II4-3	1/4	6.35	3/16	4.76	3.56
II5-2	5/16	7.93	1/8	3.17	2.29
II5-3	5/16	7.93	3/16	4.76	3.50
II5-4	5/16	7.93	1/4	6.35	4.83
II6-3	3/8	9.52	3/16	4.76	3.05
II6-4	3/8	9.52	1/4	6.35	4.83
II8-4	1/2	12.7	1/4	6.35	4.83
II8-6	1/2	12.7	3/8	9.52	7.87
II10-6	5/8	15.87	3/8	9.52	7.87
II10-8	5/8	15.87	1/2	12.70	11.0
II12-8	3/4	19.05	1/2	12.70	11.0
II12-10	3/4	19.05	5/8	15.87	14.22
II16-12	1	25.4	3/4	19.05	17.53

Metric Nylon or Soft Plastic Tubing

Part No.	Tube O.D. D	Tube I.D. D_1	Bore I.D. d
II6M-4M	6	4	2.4
II8M-6M	8	6	4.8
II10M-8M	10	8	6.4
II12M-8M	12	8	6.4
II12M-10M	12	10	8.3

01 IFF FRONT FERRULE

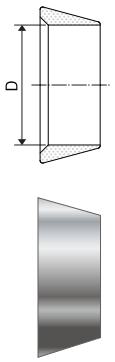

Fractional

Part No.	Tube O.D. D	
	in	mm
IFF-1	1/16	1.59
IFF-2	1/8	3.17
IFF-3	3/16	4.76
IFF-4	1/4	6.35
IFF-5	5/16	7.93
IFF-6	3/8	9.52
IFF-8	1/2	12.70
IFF-10	5/8	15.87
IFF-12	3/4	19.05
IFF-14	7/8	22.22
IFF-16	1	25.40
IFF-20	1-1/4	31.75
IFF-24	1-1/2	38.10
IFF-32	2	50.80

Metric

Part No.	Tube O.D. D
IFF-2M	2
IFF-3M	3
IFF-4M	4
IFF-6M	6
IFF-8M	8
IFF-10M	10
IFF-12M	12
IFF-15M	15
IFF-16M	16
IFF-18M	18
IFF-20M	20
IFF-22M	22
IFF-25M	25
IFF-28M	28
IFF-32M	32
IFF-38M	38
IFF-42M	42

02 IFB BACK FERRULE

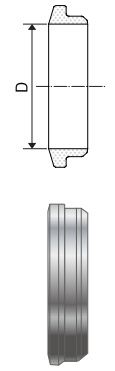

Fractional

Part No.	Tube O.D. D	
	in	mm
IFB-1	1/16	1.59
IFB-2	1/8	3.17
IFB-3	3/16	4.76
IFB-4	1/4	6.35
IFB-5	5/16	7.93
IFB-6	3/8	9.52
IFB-8	1/2	12.70
IFB-10	5/8	15.87
IFB-12	3/4	19.05
IFB-14	7/8	22.22
IFB-16	1	25.40
IFB-20	1-1/4	31.75
IFB-24	1-1/2	38.10
IFB-32	2	50.80

Metric

Part No.	Tube O.D. D
IFB-2M	2
IFB-3M	3
IFB-4M	4
IFB-6M	6
IFB-8M	8
IFB-10M	10
IFB-12M	12
IFB-15M	15
IFB-16M	16
IFB-18M	18
IFB-20M	20
IFB-22M	22
IFB-25M	25
IFB-28M	28
IFB-32M	32
IFB-38M	38
IFB-42M	42

03 IN NUT

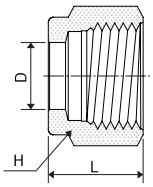



Fractional

Part No.	Tube O.D. D	Width across flat H	L
	in	in	
IN-1	1/16	5/16	7.90
IN-2	1/8	7/16	11.93
IN-3	3/16	1/2	11.93
IN-4	1/4	9/16	12.70
IN-5	5/16	5/8	13.46
IN-6	3/8	11/16	14.22
IN-8	1/2	7/8	17.52
IN-10	5/8	1	17.52
IN-12	3/4	1-1/8	17.52
IN-14	7/8	1-1/4	17.52
IN-16	1	1-1/2	20.57
IN-20	1-1/4	1-7/8	31.75
IN-24	1-1/2	2-1/4	38.10
IN-32	2	3	52.32

Metric

Part No.	Tube O.D. D	Width across flat H	L
IN-2M	2	12	11.90
IN-3M	3	12	11.90
IN-4M	4	12	11.90
IN-6M	6	14	12.70
IN-8M	8	16	13.50
IN-10M	10	19	15.10
IN-12M	12	22	17.40
IN-15M	15	25	17.40
IN-16M	16	25	17.40
IN-18M	18	30	17.40
IN-20M	20	32	17.40
IN-22M	22	32	17.40
IN-25M	25	38	20.60
IN-28M	28	46	30.60
IN-32M	32	50	34.40
IN-38M	38	60	40.60
IN-42M	42	65	44.70

01 IFS FERRULE SET

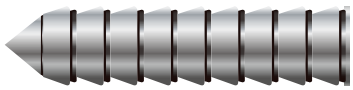

Fractional

Part No.	Tube O.D. in
IFS-1	1/16
IFS-2	1/8
IFS-3	3/16
IFS-4	1/4
IFS-5	5/16
IFS-6	3/8
IFS-8	1/2
IFS-10	5/8
IFS-12	3/4
IFS-14	7/8
IFS-16	1
IFS-20	1-1/4
IFS-24	1-1/2
IFS-32	2

Metric

Part No.	Tube O.D.
IFS-2M	2
IFS-3M	3
IFS-4M	4
IFS-6M	6
IFS-8M	8
IFS-10M	10
IFS-12M	12
IFS-15M	15
IFS-16M	16
IFS-18M	18
IFS-20M	20
IFS-22M	22
IFS-25M	25
IFS-28M	28
IFS-30M	30
IFS-32M	32
IFS-38M	38

02 IFSN NUT + FERRULE SET



Fractional

Part No.	Tube O.D. in
IFSN-1	1/16
IFSN-2	1/8
IFSN-3	3/16
IFSN-4	1/4
IFSN-5	5/16
IFSN-6	3/8
IFSN-8	1/2
IFSN-10	5/8
IFSN-12	3/4
IFSN-14	7/8
IFSN-16	1
IFSN-20	1-1/4
IFSN-24	1-1/2
IFSN-32	2

Metric

Part No.	Tube O.D.
IFSN-2M	2
IFSN-3M	3
IFSN-4M	4
IFSN-6M	6
IFSN-8M	8
IFSN-10M	10
IFSN-12M	12
IFSN-15M	15
IFSN-16M	16
IFSN-18M	18
IFSN-20M	20
IFSN-22M	22
IFSN-25M	25
IFSN-28M	28
IFSN-30M	30
IFSN-32M	32
IFSN-38M	38

01 INSTALLATION INSTRUCTIONS

COMPONENT IDENTIFICATION

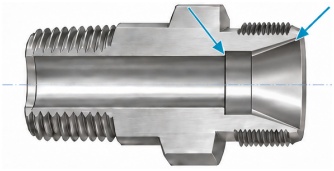

BODY



FRONT FERRULE



BACK FERRULE

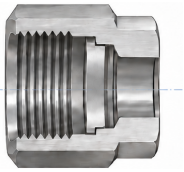

NUT

INSTALLATION INSTRUCTION FOR i-LOK

STEP 1. TUBE INSERT

Insert the tube through the nut and ferrules until it bottoms firmly against the body shoulder.

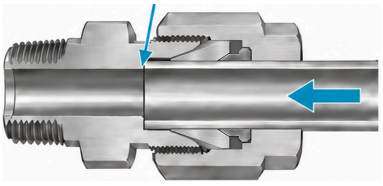

STEP 2. FINGER-TIGHTEN NUT

Tighten the nut finger-tight.



STEP 3. MAKE-UP

Hold the body steady with a backup wrench, then tighten the nut 3/4 turn or 1-1/4 turns (see table below).

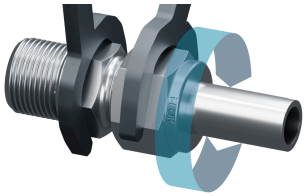

3/4 TURN	1-1/4 TURNS	NOTE
Small Fittings	**Larger Fittings**	For 1"-2" (25-50 mm) fittings, a hydraulic or electric pre-swaging unit is recommended.
1/16", 1/8", 3/16", 3mm, 4mm	1/4"-2", 6mm-50mm	

Before make-up, mark the nut at the 6 o'clock position. Then wrench-tighten the nut 3/4 turn (to 3 o'clock) for small fittings, or 1-1/4 turns (to 9 o'clock) for larger fittings.

RE-INSTALLATION INSTRUCTIONS

Before reassembly, make sure all components are clean and free of damage.

STEP 1. DRAW LINES

Before disassembly, mark aligned lines on the nut and body.

STEP 2. FITTING DISASSEMBLY

Loosen the nut with a wrench and remove the swaged tube assembly from the body.

STEP 3. TUBE RE-INSERT

Insert the swaged tube assembly into the body until the front ferrule seats against the body.

STEP 4. REMAKE



Tighten the nut finger-tight, then turn it with a wrench to the previously marked position, where a sharp rise in torque will be felt. After several remakes, the nut will need to be advanced slightly past the mark.



Advance the nut in 1/16-turn increments until the fitting is leak-tight.

FOR HIGH PRESSURE OR HIGH SAFETY APPLICATIONS

After the first remake, advance the nut 1/16 turn past the marked position.

TUBE INSTALLATION

Always maintain the minimum straight tube length shown in the tables. If the tube does not enter the fitting easily, do not force it; check the tube for ovality.

REQUIRED MINIMUM TUBE STRAIGHT LENGTH

If a bend is too close to the fitting, the bent section can enter the fitting and prevent the tube from bottoming, causing leakage.

WARNING
Do not bend tubing that is already assembled in a fitting.

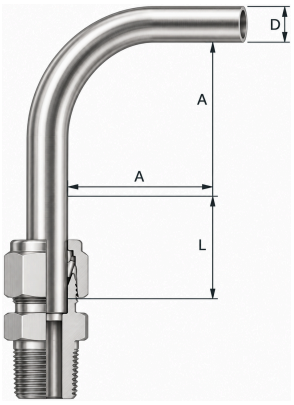

FRACTIONAL TUBE	
D	L
1/16	1/2
1/8	23/32
3/16	3/4
1/4	13/16
5/16	7/8
3/8	15/16
1/2	1 3/16
5/8	1-1/4
3/4	1-1/4
7/8	1 5/16
1	1 1/2
1-1/4	2
1 1/2	2 13/32
2	3 1/4

Unit: in

METRIC TUBE	
D	L
3	19
6	21
8	23
10	25
12	31
14	32
15	32
16	32
18	32
20	34
22	34
25	40
28	46
30	50
32	54
38	63
50	80

Unit: mm

i-LOK®

DOUBLE FERRULE
TUBE FITTINGS

