MARKING:

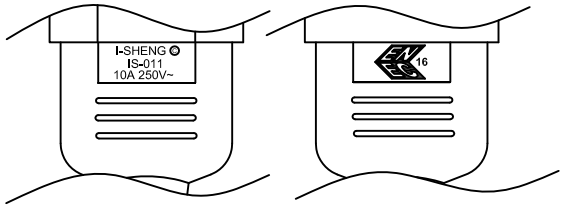

MARKING:

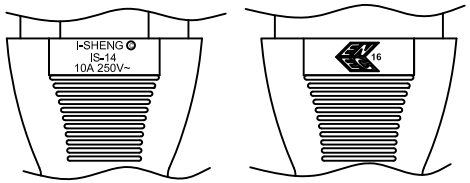

No	BOM ITEM	Q'TY	P/N
1	KPR-11 TERMINAL	3 pcs	BBN11000
2	IS-011 DUST COVER(GREY)	1 pcs	MP01101H
3	IS-011 INNER BODY	1 pcs	MI011000
4	PVC 45P (SA87, IS-011)	18 g	RPP0451H
5	KPR-14 TERMINAL	3 pcs	BBB14000
6	IS-14 INNER BODY	1 set	MI014000
7	PVC 45P (SA87, IS-14)	22 g	RPP0451H
8	PE TIE (WHITE，8 inch)	1 pcs	KBW10008
9	PE BAG(120*290)	1 pcs	KPR11000
10	LABEL(45*25)	1 pcs	

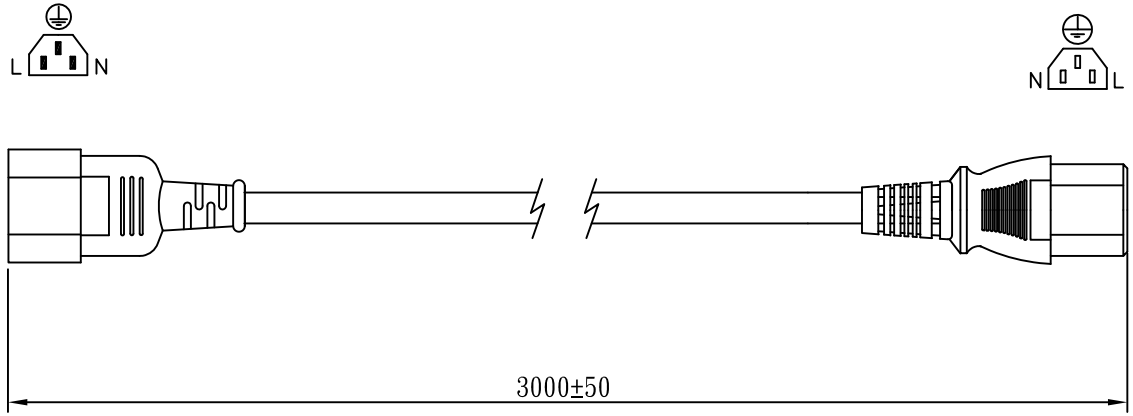

NOTE:1.CORD 128
2.CONTENT 1373354

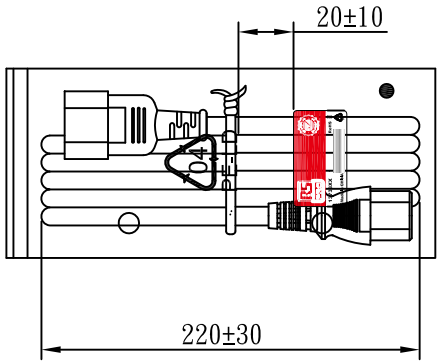

WIRING COLOR:
E: Yellow/Green
N: Blue
L: Brown

CABLE		H05VV-F 3G 1.0 DENT PRINT CT-1H(GREY)			
PLUG		IS-011 + IS-14	LENGTH	3000	UNIT mm
CLIENT	NAME	First connectivity	N/W		UNIT kg
	P/N	1373354	SG DWG	SR-172524-8	VER. A

Design. by	楊 東	17.07.17
Review. by	楊望春	17.07.17
Approval. by	朱曉玲	17.07.17

LENGED ON CORD：(E05-14)

IEMMEQU H05VV-F 3G 1.0mm² 300/500V -LF- ◁VDE▷ KEMA-KEUR ◁ÖVE▷ △ CEBEC 809 NF-USE 1346

X14 JC3016 1H 300 01

Sample Drawing

FORM:END-22