CN-AP35-005

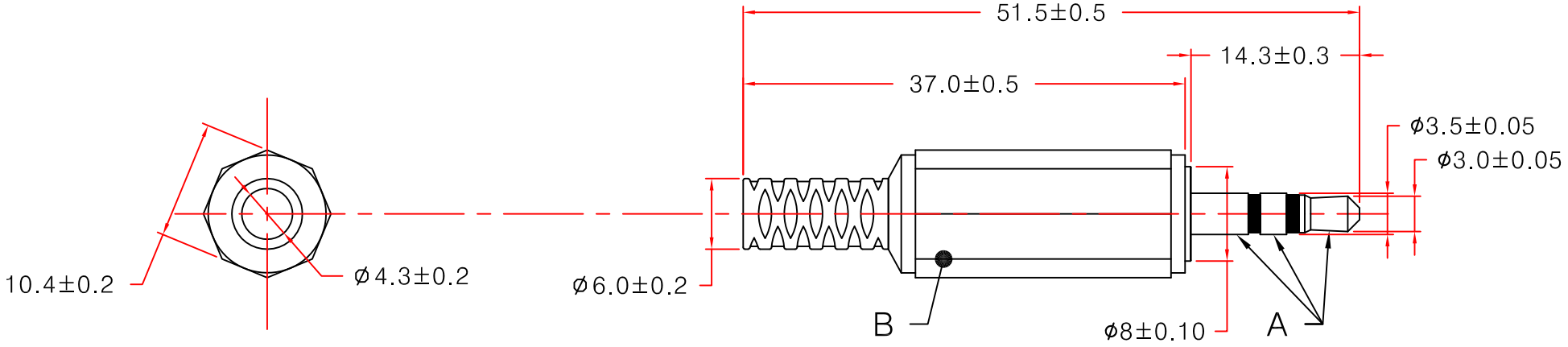

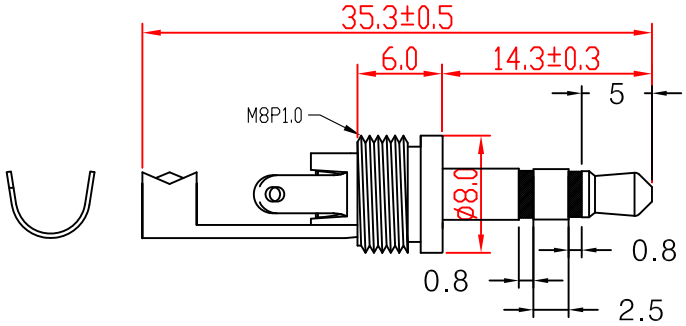

3.5SP BODY

REMARKS:

INSULATOR: POM
TEMPERATURE RESISTANCE:100°C

TITLE: 3.5SP PLASTIC CAP

Unless Specified,otherwise tolerance are +/-0.1mm; Remark:ROHS Requirement Applied(符合ROHS)

NO	Description	Unit	Materials	Finish/Color	PART NO.
A.	3.5SP	1	BRASS/POM	NI	
B.	PLASTIC CAP	1	PE	B	
C.					
D.					
E.					

REV	DESCRIPTION	Issue	A	DATE:	
1					
2					
3					

Approved	
Check	
Drawn	李傑
Unit	M/M
Scale	2:1