FLAT FACE/71 SERIES/STEEL

VALVOLA PIANA/ACCIAIO
FLAT FACE/STEEL
FLACHDICHTEND/STAHL
CLAPET PLAT/ACIER

Caratteristiche tecniche I

- Intercambiabilità: Parker/Snap-Tite 71
- Occlusione: faccia piana
- Aggancio: sfere radiali
- Materiale: acciaio
- Finitura: Zn-Fe (Cr III)
- Filettature: BSP-NPT-SAE
- Guarnizioni standard: NBR
- Temperatura d'esercizio: -25°C+100°C
- Guarnizioni opzionali: FKM,EPDM o altro.
- Pressioni di esercizio: 200-350 bar
- Connessione in pressione residua: non consentita

Technical data E

- Interchange: Parker/Snap-Tite 71
- Occlusion: flat face
- Locking: radial balls
- Material: steel
- Finishing: Zn-Fe (Cr III)
- Threads: BSP-NPT-SAE
- Standard seals: NBR
- Working temperature: -25°C+100°C
- Optional seals: FKM,EPDM or more.
- Working pressure: 200-350 bar
- Connection under residual pressure: not allowed

Technische Merkmale D

- Austauschbarkeit: Parker/Snap-Tite 71
- Verschluss: flachdichtend
- Verriegelung: Stahlkugeln
- Werkstoff: Stahl
- Ausführung: Zn-Fe (Cr III)
- Gewinde: BSP-NPT-SAE
- Standard-Dichtungen: NBR
- Betriebstemperatur: -25°C+100°C
- Dichtungen nach Wahl: FKM,EPDM,usw.
- Betriebsdruck: 200-350 bar
- Kuppeln unter Restdruck: nicht möglich

Caractéristiques techniques F

- Interchangeabilité: Parker/Snap-Tite 71
- Obturation: clapet plat
- Accrochage: billes radiales
- Matériel: acier
- Traitement: Zn-Fe (Cr III)
- Taraudage: BSP-NPT-SAE
- Joints standard: NBR
- Température de service: -25°C+100°C
- Joints facultatifs: FKM,EPDM,ect.
- Pression de service: 200-350 bar
- Connexion sous pression résiduelle: pas possible

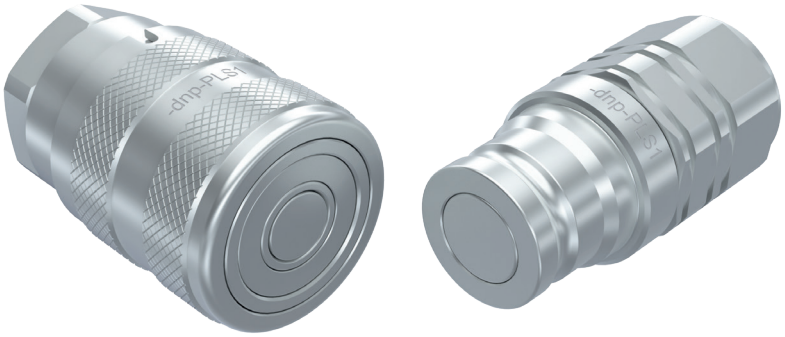

Nominal size				Max working pressure	Rated flow	Max flow rate	Min burst pressure			Fluid spillage
							Male	Female	Coupled	
DNP	BG	ISO	mm	MPa*	l/min	l/min	MPa	MPa	MPa	cc
06	1	6.3	5.3	35	12	20	170	143	170	0.010
10	2	10	10.4	35	23	45	150	175	160	0.020
13	3	12.5	13	35	45	60	140	155	210	0.030
20	4	19	17	35	106	150	160	130	170	0.060
25	5	25	21.8	35	189	240	130	115	145	0.100
50	8	50	38	20	757	1000	65	65	80	0.150

1 MPa = 145.04 psi • 1 l = 0.264 gal
*Dinamic pressure. For static pressure multiply by two

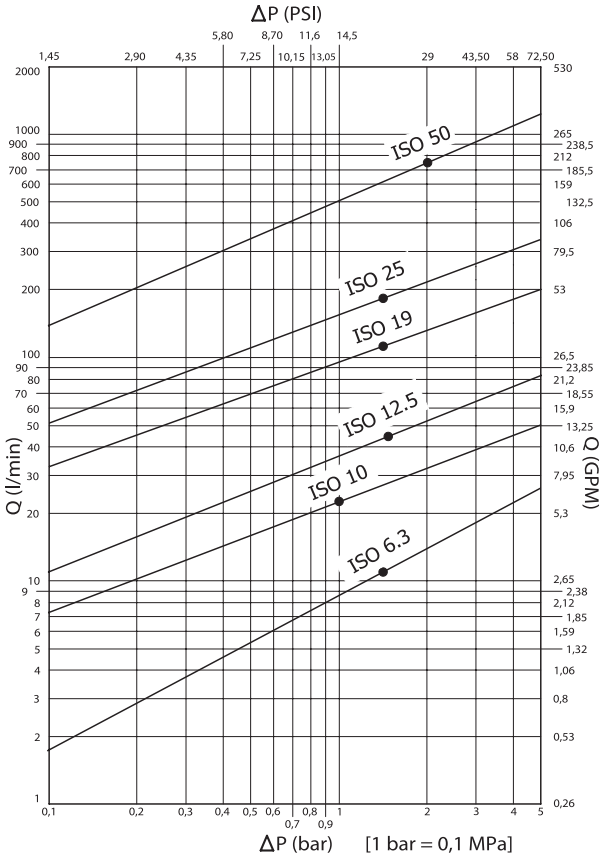

PLS1 DN06 - BG 1 - ISO 6.3

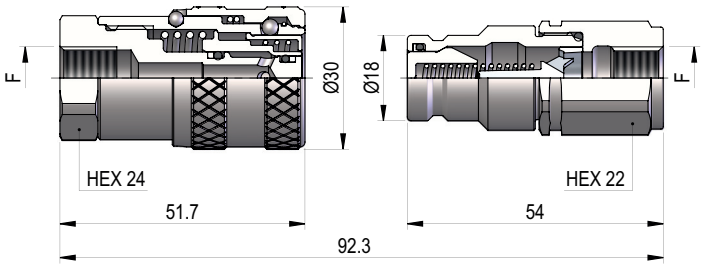

THREADS	F	STANDARD	FEMMINA - FEMALE - MUFFE - FEMELLE			MASCHIO - MALE - STECKER - MALE		
			COD. F	Weight (g)	Packaging (pcs)	COD. M	Weight (g)	Packaging (pcs)
IG 1	BSP 1/4"	DIN 3852-2	PLS1.0606.112	177	93	PLS1.0606.113	98	200
	NPT 1/4"	ANSI B1.20.1	PLS1.0606.012	177	93	PLS1.0606.013	98	200

PLS1 DN10 - BG 2 - ISO 10

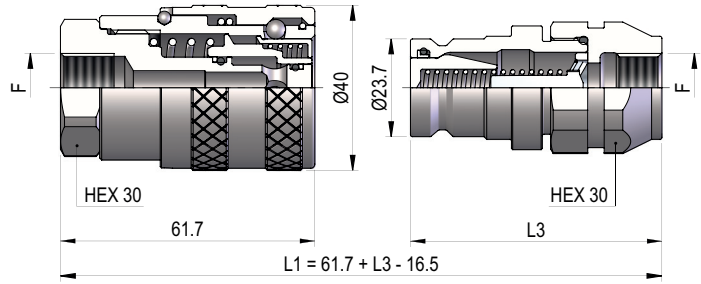

THREADS	L3	F	STANDARD	FEMMINA - FEMALE - MUFFE - FEMELLE			MASCHIO - MALE - STECKER - MALE		
				COD. F	Weight (g)	Packaging (pcs)	COD. M	Weight (g)	Packaging (pcs)
IG 1	61	BSP 3/8"	DIN 3852-2	PLS1.1010.112	378	35	PLS1.1010.113	158	60
	64	NPT 3/8"	ANSI B1.20.1	PLS1.1010.012	378	35	PLS1.1010.013	184	60
	61	BSP 1/2"	DIN 3852-2	PLS1.1013.112	357	35	PLS1.1013.113	154	60
	64	NPT 1/2"	ANSI B1.20.1	PLS1.1013.012	359	35	PLS1.1013.013	168	60
IG 2	61	9/16"-18 UNF 2B	SAE J 1926-1	PLS1.1015.032	389	35	PLS1.1015.033	165	60

THREADS

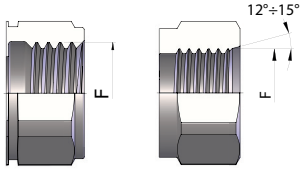

IG 1 IG 2

PLS1 DN13 - BG 3 - ISO 12.5

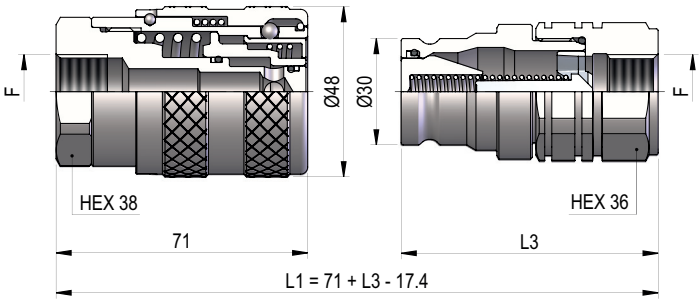

THREADS	L3	F	STANDARD	FEMMINA - FEMALE - MUFFE - FEMELLE			MASCHIO - MALE - STECKER - MALE		
				COD. F	Weight (g)	Packaging (pcs)	COD. M	Weight (g)	Packaging (pcs)
IG 1	72.5	BSP 1/2"	DIN 3852-2	PLS1.1313.112	624	23	PLS1.1313.113	339	35
	74	NPT 1/2"	ANSI B1.20.1	PLS1.1313.012	627	23	PLS1.1313.013	352	35
IG 2	70	3/4"-16 UNF 2B	SAE J 1926-1	PLS1.1319.032	639	23	PLS1.1319.033	331	35

PLS1 DN20 - BG 4 - ISO 19

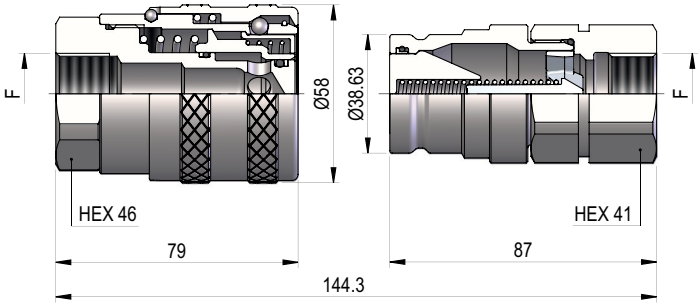

THREADS	F	STANDARD	FEMMINA - FEMALE - MUFFE - FEMELLE			MASCHIO - MALE - STECKER - MALE		
			COD. F	Weight (g)	Packaging (pcs)	COD. M	Weight (g)	Packaging (pcs)
IG 1	BSP 3/4"	DIN 3852-2	PLS1.2019.112	954	15	PLS1.2019.113	560	28
	NPT 3/4"	ANSI B1.20.1	PLS1.2019.012	960	15	PLS1.2019.013	567	28
IG 2	1"1/16-12 UN 2B	SAE J 1926-1	PLS1.2027.032	945	15	PLS1.2027.033	554	28

THREADS

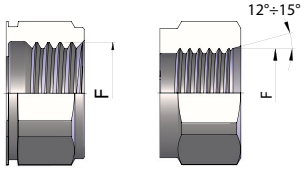

IG 1 IG 2

PLS1 DN25 - BG 5 - ISO 25

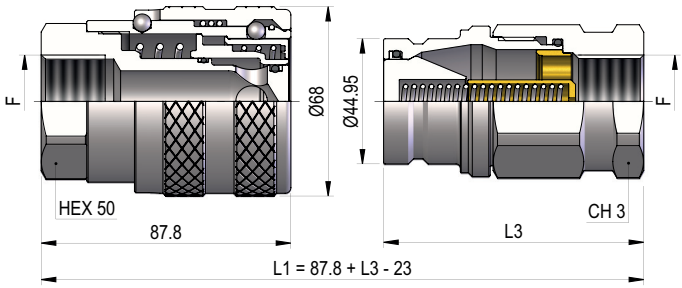

THREADS	CH3	L3	F	STANDARD	FEMMINA - FEMALE - MUFFE - FEMELLE			MASCHIO - MALE - STECKER - MALE		
					COD. F	Weight (g)	Packaging (pcs)	COD. M	Weight (g)	Packaging (pcs)
IG 1	50	91.5	BSP 1"	DIN 3852-2	PLS1.2525.112	1400	11	PLS1.2525.113	833	20
	50	91.5	NPT 1"	ANSI B1.20.1	PLS1.2525.012	1422	11	PLS1.2525.013	840	20
	55	91.5	BSP 1"¼	DIN 3852-2	PLS1.2531.112	1300	11	PLS1.2531.113	904	20
	55	93.5	NPT 1"¼	ANSI B1.20.1	PLS1.2531.012	1320	11	PLS1.2531.013	918	20
IG 2	50	91.5	1"5/16-12 UN 2B	SAE J 1926-1	PLS1.2533.032	1364	11	PLS1.2533.033	822	20
	55	91.5	1"5/8-12 UN 2B	SAE J 1926-1	PLS1.2541.032	1267	11	PLS1.2541.033	867	20

PLS1 DN50 - BG 8 - ISO 50

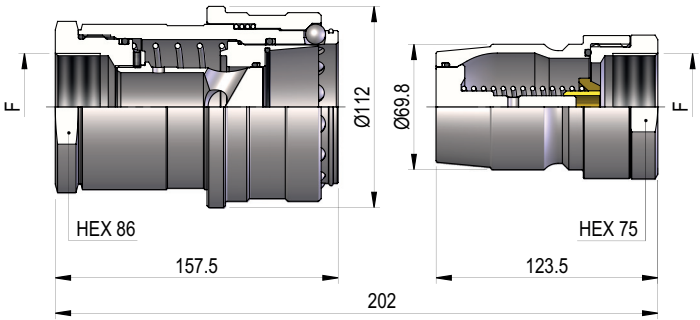

THREADS		F	STANDARD	FEMMINA - FEMALE - MUFFE - FEMELLE			MASCHIO - MALE - STECKER - MALE		
				COD. F	Weight (g)	Packaging (pcs)	COD. M	Weight (g)	Packaging (pcs)
IG 1		BSP 1"½	DIN 3852-2	PLS1.5039.112	5600	4	PLS1.5039.113	2030	8
		NPT 1"½	ANSI B1.20.1	PLS1.5039.012	5620	4	PLS1.5039.013	2044	8
		BSP 2"	DIN 3852-2	PLS1.5051.112	5360	4	PLS1.5051.113	1800	8
		NPT 2"	ANSI B1.20.1	PLS1.5051.012	5370	4	PLS1.5051.013	1810	8

THREADS

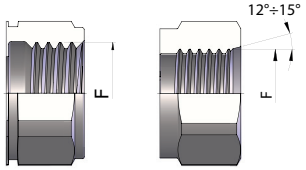

IG 1 IG 2

PLASTIC CAPS

NOMINAL SIZE			FEMALE DUST CAP					MALE DUST CAP					COLOR	MATERIAL
				Dimensions			Weight		Dimensions			Weight		
DNP	BG	ISO	COD. F	D	L	D1	(g)	COD. M	D	L	D1	(g)		
06	1	6.3	SPLS.06002*	38	260	26	35	SPLS.06003*	28	260	26	25	●	PVC
10	2	10	SPLS.10002*	50	315	35	57	SPLS.10003*	32	315	35	30	●	PVC
13	3	12.5	SPLS.13002*	59	300	42	78	SPLS.13003*	42	300	42	43	●	PVC
20	4	19	SPLS.20002*	70	430	55	108	SPLS.20003*	50	430	55	58	●	PVC
25	5	25	SPLS.25002	79	390	60	130	SPLS.25003	56	390	60	68	●	PVC
50	8	50	SPLS.50002	120	315	100	230	SPLS.50003	85	360	80	220	●	PVC

*REALIZZATI SU RICHIESTA DEL CLIENTE
*AVAILABLE ON REQUEST
*AUF ANFRAGE LIEFERBAR
*DISPONIBLES SUR DEMANDE

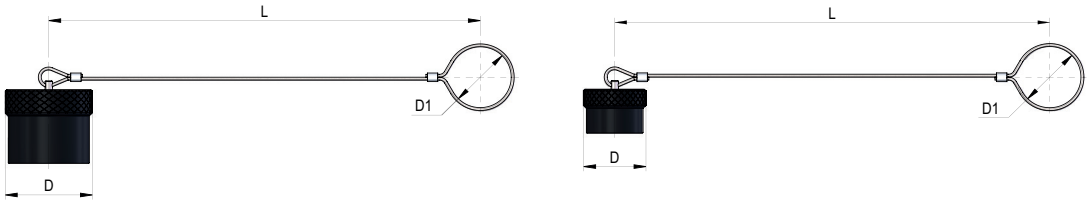

METAL CAPS

NOMINAL SIZE			FEMALE DUST CAP					MALE DUST CAP					MATERIAL
				Dimensions			Weight		Dimensions			Weight	
DNP	BG	ISO	COD. F	D	L	D1	(g)	COD. M	D	L	D1	(g)	
06	1	6.3	SPLS.06202*	38	260	26	35	SPLS.06203*	28	260	26	28	Aluminum
10	2	10	SPLS.10202*	50	315	35	106	SPLS.10203*	32	315	35	43	Aluminum
13	3	12.5	SPLS.13202*	59	300	42	116	SPLS.13203*	42	300	42	66	Aluminum
20	4	19	SPLS.20202*	70	430	55	190	SPLS.20203*	50	430	55	92	Aluminum
25	5	25	SPLS.25202*	79	390	60	205	SPLS.25203*	56	390	60	118	Aluminum

*REALIZZATI SU RICHIESTA DEL CLIENTE
*AVAILABLE ON REQUEST
*AUF ANFRAGE LIEFERBAR
*DISPONIBLES SUR DEMANDE

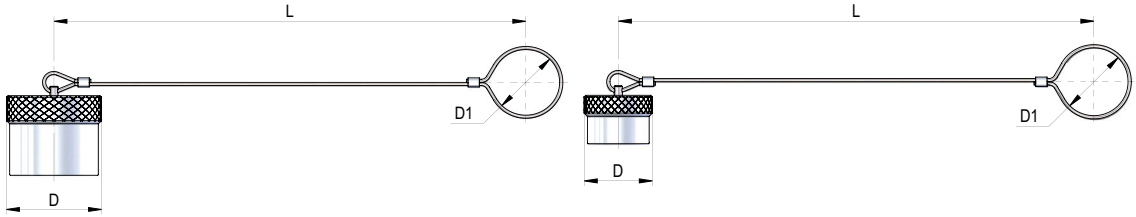

SPARE PARTS

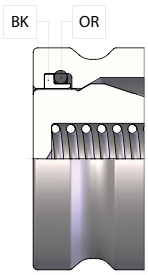

NOMINAL SIZE			MALE GASKET	
DNP	BG	ISO	OR (NBR*)	BK (PTFE)
06	1	6.3	PLT.304.030	PLS.006.130
10	2	10	PLS.010.120	PLS.010.130
13	3	12.5	PLT.025.120	PLS.013.130
20	4	19	PVT.019.122	PLS.019.130
25	5	25	PLS.025.120	PLS.025.130
50	8	50	PVT.030.121	PLS.050.130

*AL CODICE DELLA GUARNIZIONE IN NBR AGGIUNGERE 'E' PER EPDM O 'V' PER VITON
*TO THE NBR GASKET CODE ADD 'E' FOR EPDM OR 'V' FOR VITON
*ZU DER ARTIKELNR. DER NBR DICHTUNG GEBEN SIE 'E' FUER EPDM ODER 'V' FUER VITON AN
*AU CODE DU JOINT EN NBR JOINDRE 'E' POUR EPDM OU 'V' POUR VITON

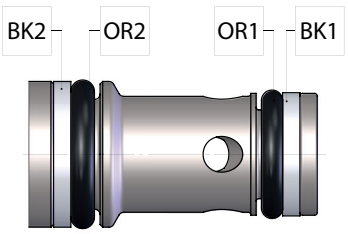

NOMINAL SIZE			FEMALE GASKET		FEMALE GASKET	
DNP	BG	ISO	OR1 (NBR*)	BK1 (PTFE)	OR2 (NBR*)	BK2 (PTFE)
06	1	6.3	PLS.006.210	PLS.006.132	PLS.006.121	PLS.006.131
10	2	10	PLS.010.210	PLS.010.132	PVS.306.030	PLT.013.131 N
13	3	12.5	PBV.004.120	PLS.013.132	PBV.006.120	PLS.013.131
20	4	19	VVT.013.120	PLS.019.132	PLK.025.121	PLS.019.131
25	5	25	PLS.025.210	PLS.025.132	PVT.019.122	PLS.025.131

*AL CODICE DELLA GUARNIZIONE IN NBR AGGIUNGERE 'E' PER EPDM O 'V' PER VITON
*TO THE NBR GASKET CODE ADD 'E' FOR EPDM OR 'V' FOR VITON
*ZU DER ARTIKELNR. DER NBR DICHTUNG GEBEN SIE 'E' FUER EPDM ODER 'V' FUER VITON AN
*AU CODE DU JOINT EN NBR JOINDRE 'E' POUR EPDM OU 'V' POUR VITON