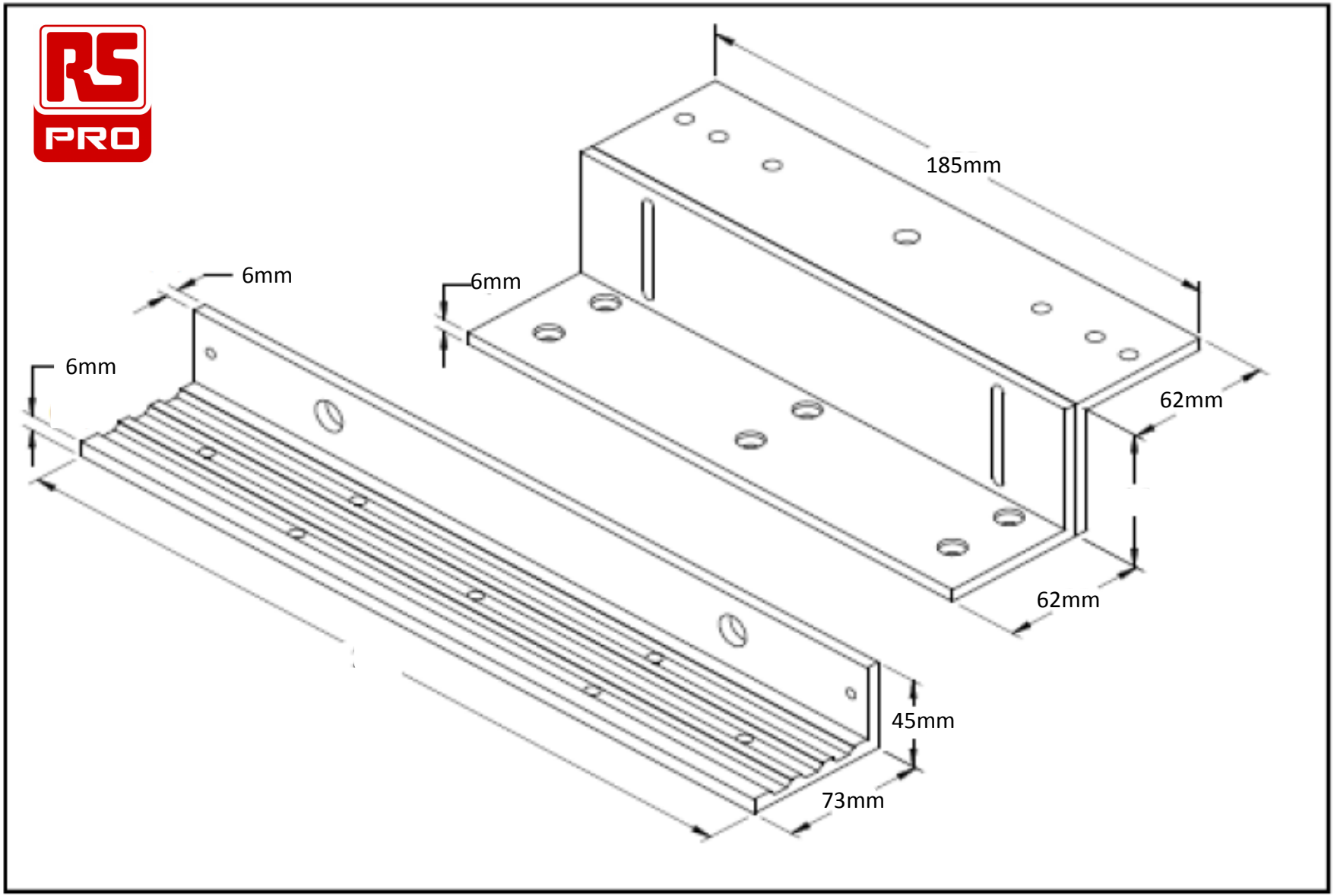500ZL DIMENSIONS