75 SERIES/WING NUT

GHIERA A FARFALLA/ACCIAIO
WING NUT/STEEL
FLÜGELMUTTERHÜLSE/STAHL
ECROU PAPILLON/ACIER

Caratteristiche tecniche I

- Intercambiabilità: Parker/Snap-Tite 75
- Occlusione: valvola
- Aggancio: a vite
- Materiale: acciaio
- Finitura acciaio: Zn-Fe (Cr III)
- Filettature: BSP-NPT-SAE
- Guarnizioni standard: NBR
- Temperatura d'esercizio: -25°C+100°C
- Guarnizioni opzionali: FKM
- Pressioni di esercizio: 350 bar
- Connessione in pressione residua: consentita (lato maschio o lato femmina)

Technical data E

- Interchange: Parker/Snap-Tite 75
- Occlusion: poppet
- Locking: screw
- Material: steel
- Steel finishing: Zn-Fe (Cr III)
- Threads: BSP-NPT-SAE
- Standard seals: NBR
- Working temperature: -25°C+100°C
- Optional seals: FKM
- Working pressure: 350 bar
- Connection under residual pressure: allowed (both male or female side)

Technische Merkmale D

- Austauschbarkeit: Parker/Snap-Tite 75
- Verschluss: ventil
- Verriegelung: Schraubweise
- Werkstoff: Stahl
- Stahl Ausführung: Zn-Fe (Cr III)
- Gewinde: BSP-NPT-SAE
- Standard-Dichtungen: NBR
- Betriebstemperatur: -25°C+100°C
- Dichtungen nach Wahl: FKM
- Betriebsdruck: 350 bar
- Kuppeln unter Restdruck: erlaubt (Steckerseite oder Muffeseite)

Caractéristiques techniques F

- Interchangeabilité: Parker/Snap-Tite 75
- Obturation: clapet
- Accrochage: à visser
- Matériel: acier
- Traitement acier: Zn-Fe (Cr III)
- Taraudage: BSP-NPT-SAE
- Joints standard: NBR
- Température de service: -25°C+100°C
- Joints facultatifs: FKM
- Pression de service: 350 bar
- Connexion sous pression résiduelle: possible (côté male ou femelle)

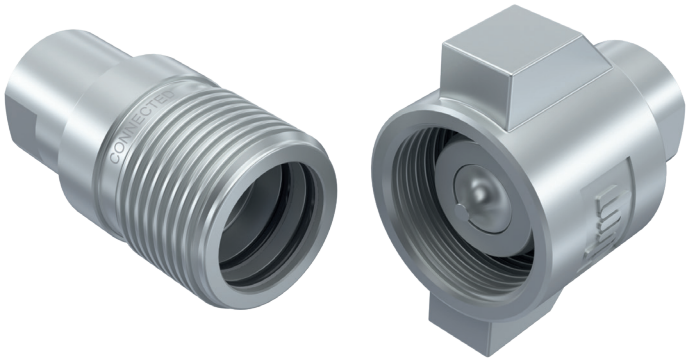

Nominal size				Max working pressure	Rated flow	Max flow rate	Min burst pressure			Fluid spillage
							Male	Female	Coupled	
DNP	BG	ISO	mm	MPa	l/min	l/min	MPa	MPa	MPa	cc
20	4	19	17	35	106	190	75	140	150	8.00
25	5	25	22	35	189	280	90	150	160	16.00
30	6	31.5	27	35	288	480	85	160	130	31.00
39	7	40	34	35	379	700	60	90	120	64.00
50	8	50	47	35	757	1000	50	60	110	141.00

1 MPa = 145.04 psi • 1 l = 0.264 gal

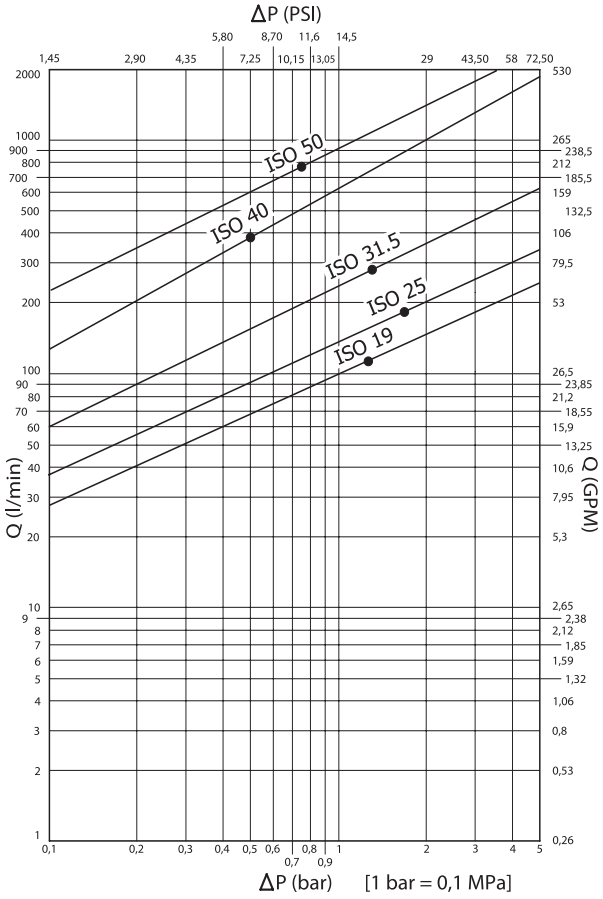

VFH1 DN20 - BG 4 - ISO 19

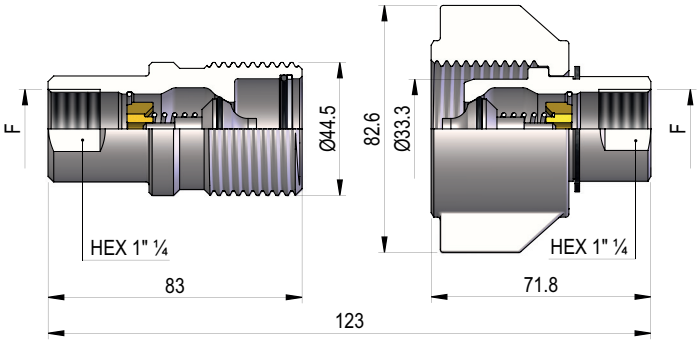

THREADS	F	STANDARD	FEMMINA - FEMALE - MUFFE - FEMELLE			MASCHIO - MALE - STECKER - MALE		
			COD. F	Weight (g)	Packaging (pcs)	COD. M	Weight (g)	Packaging (pcs)
IG 1	BSP 3/4"	DIN 3852-2	VFH1.2019.002	475	28	VFH1.2019.003	835	12
	NPT 3/4"	ANSI B1.20.1	VFH1.2019.012	480	28	VFH1.2019.013	840	12

VFH1 DN25 - BG 5 - ISO 25

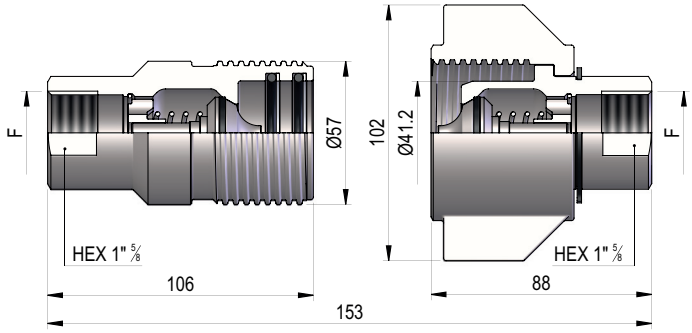

THREADS	F	STANDARD	FEMMINA - FEMALE - MUFFE - FEMELLE			MASCHIO - MALE - STECKER - MALE		
			COD. F	Weight (g)	Packaging (pcs)	COD. M	Weight (g)	Packaging (pcs)
IG 1	BSP 1"	DIN 3852-2	VFH1.2525.002	1036	15	VFH1.2525.003	1438	8
	NPT 1"	ANSI B1.20.1	VFH1.2525.012	1046	15	VFH1.2525.013	1447	8
IG 2	1"5/16-12 UN 2B	SAE J 1926-1	VFH1.2533.032	1018	15	VFH1.2533.033	1419	8

THREADS

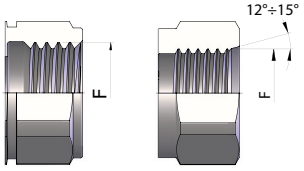

IG 1 IG 2

VFH1 DN30 - BG 6 - ISO 31.5

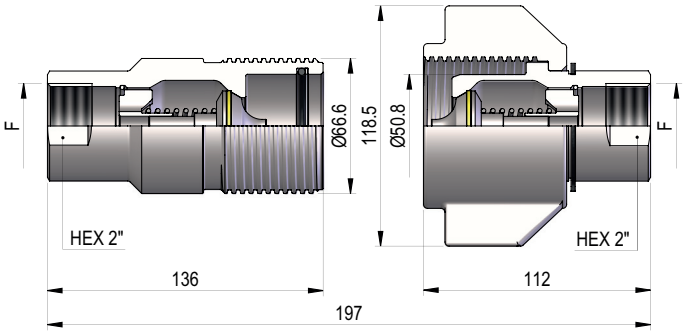

THREADS	F	STANDARD	FEMMINA - FEMALE - MUFFE - FEMELLE			MASCHIO - MALE - STECKER - MALE		
			COD. F	Weight (g)	Packaging (pcs)	COD. M	Weight (g)	Packaging (pcs)
IG 1	BSP 1"¼	DIN 3852-2	VFH1.3031.002	1720	6	VFH1.3031.003	2390	6
	NPT 1"¼	ANSI B1.20.1	VFH1.3031.012	1740	6	VFH1.3031.013	2410	6

VFH1 DN39 - BG 7 - ISO 40

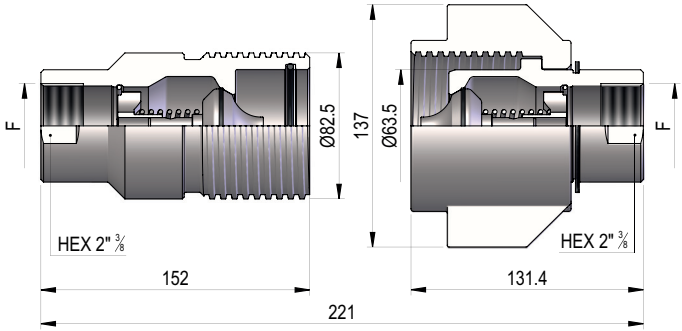

THREADS	F	STANDARD	FEMMINA - FEMALE - MUFFE - FEMELLE			MASCHIO - MALE - STECKER - MALE		
			COD. F	Weight (g)	Packaging (pcs)	COD. M	Weight (g)	Packaging (pcs)
IG 1	BSP 1"½	DIN 3852-2	VFH1.3939.002	3000	6	VFH1.3939.003	3975	4
	NPT 1"½	ANSI B1.20.1	VFH1.3939.012	3020	6	VFH1.3939.013	4000	4

THREADS

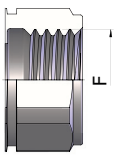

IG 1

VFH1 DN50 - BG 8 - ISO 50

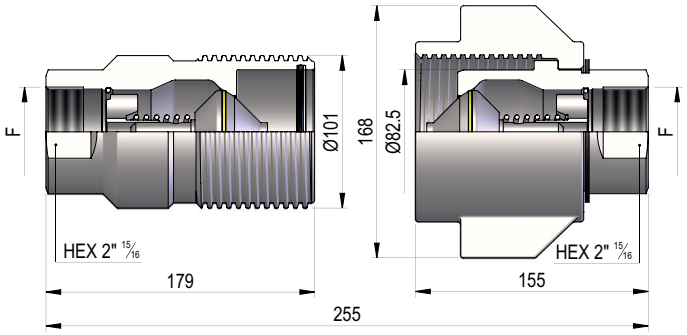

THREADS	F	STANDARD	FEMMINA - FEMALE - MUFFE - FEMELLE			MASCHIO - MALE - STECKER - MALE		
			COD. F	Weight (g)	Packaging (pcs)	COD. M	Weight (g)	Packaging (pcs)
IG 1	BSP 2"	DIN 3852-2	VFH1.5051.002	5410	2	VFH1.5051.003	7820	2
	NPT 2"	ANSI B1.20.1	VFH1.5051.012	5570	2	VFH1.5051.013	7935	2

THREADS

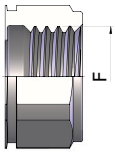

IG 1

ACCESSORI / ACCESSORIES / ZUBEHÖR / ACCESSOIRES

METAL CAPS

NOMINAL SIZE			FEMALE DUST CAP					MALE DUST PLUG					MATERIAL
				Dimensions			Weight		Dimensions			Weight	
DNP	BG	ISO	COD. F	D	L	D1	(g)	COD. M	D	L	D1	(g)	
20	4	19	SVFH.20202	56.5	272	45	158	SVFH.20203	50	272	45	140	Aluminum
25	5	25	SVFH.25202	69.5	324	48	212	SVFH.25203	69.5	324	48	247	Aluminum
30	6	31.5	SVFH.30202	80.5	324	48	314	SVFH.30203	75	324	48	389	Aluminum
39	7	40	SVFH.39202	95	387	74.5	503	SVFH.39203	95	387	74.5	694	Aluminum
50	8	50	SVFH.50202	120	392	85	839	SVFH.50203	114	392	85	1026	Aluminum

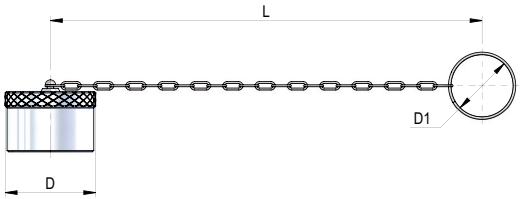

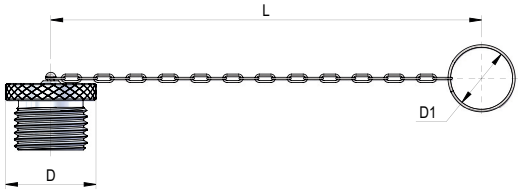

SPARE PARTS

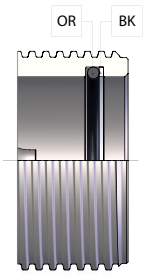

NOMINAL SIZE			FEMALE GASKET	
DNP	BG	ISO	OR (NBR*)	BK (PTFE)
20	4	19	PPV.325.030	VFH.019.130
25	5	25	PVV.025.121 (2)	VFH.025.130 (2)
30	6	31.5	VFH.030.120	VFH.030.130
39	7	40	VFH.039.120	VFH.039.130
50	8	50	VFH.050.120	VFH.050.130

*AL CODICE DELLA GUARNIZIONE IN NBR AGGIUNGERE 'V' PER VITON
*TO THE NBR GASKET CODE ADD "V' FOR VITON
*ZU DER ARTIKELNR. DER NBR DICHTUNG GEBEN SIE "V' FUER VITON AN
*AU CODE DU JOINT EN NBR JOINDRE "V' POUR VITON