FEATURES

-
-
-
-
-

RS PRO Piezo Buzzer Components

RS Stock No.: 5358180

RS Professionally Approved Products bring to you professional quality parts across all product categories. Our product range has been tested by engineers and provides a comparable quality to the leading brands without paying a premium price.

Product Description

APPEARANCE DRAWING

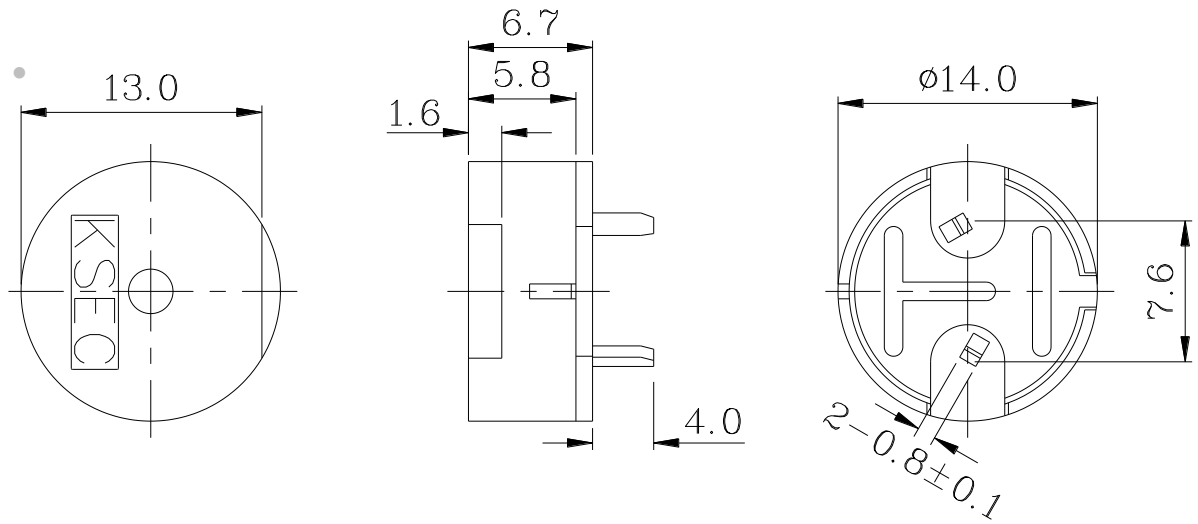

Tol : ± 0.5

Unit: mm

General Specifications

SPECIFICATION

No.	Item	Unit	Specification	Condition
1	Operating Volt.	Vp-p	MAX. 30	
2	**Current consumption**	mA	MAX. 7	at 10Vp-p,square wave,4.0KHz.
3	Sound pressure level	dB	MIN. 80	at 10cm/10Vp-p,square wave,4.0KHz.
4	Electrostatic capacity	pF	8,500 ± 30%	at 120Hz/1V
5	Operating temp.	℃	-30 ~ +85	
6	Storage temp.	℃	-40 ~ +90	

7	Dimension	mm	φ14.0 x H6.7	See appearance drawing
8	Weight (MAX)	gram	1.0	
9	Material		PBT+10% GLASS（BLACK）	
10	Terminal		Pin type (/Plating Au)	See appearance drawing
11	Environmental Protection Regulation		RoHS	

Electrical Specifications

TYPICAL FREQUENCY RESPONSE CURVE

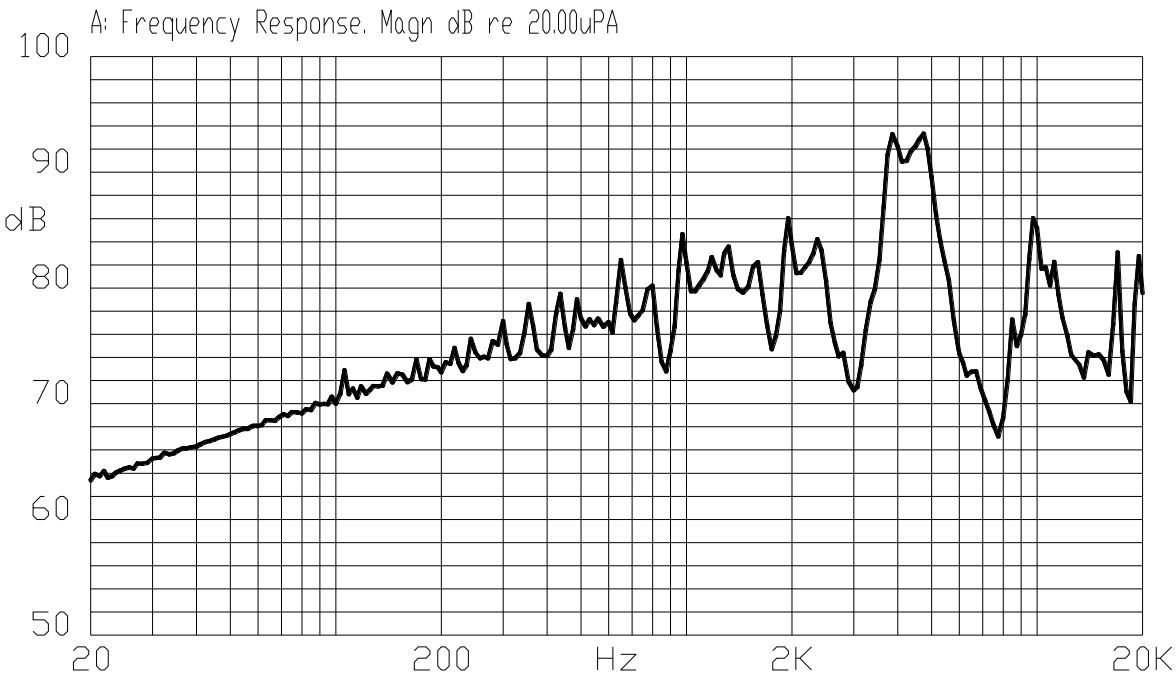

MEASURING METHOD

S.P.L. Measuring Circuit
Input Signal: 10Vp-p, 4.0kHz, Square Wave

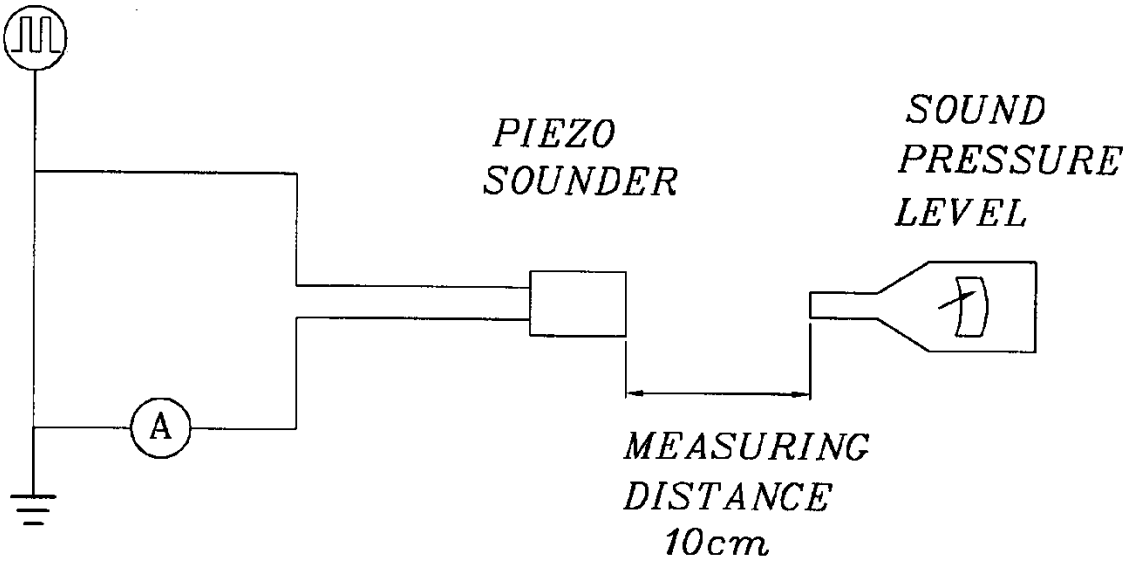

Mic : RION S.P.L meter UC30 or equivalent
S.G : Hewlett Packard 33120A Function Generator or equivalent

Mechanical Specifications

No.	Item	Test Condition	Evaluation standard
1	Solderability	Lead terminals are immersed in rosin for 5 seconds and then immersed in solder bath of +270±5℃ for 3±1 seconds.	90% min. lead terminals shall be wet with solder. (Except the edge of terminal)
2	Soldering Heat Resistance	Lead terminal are immersed up to 1.5mm from sounder's body in solder bath of +300±5℃ for 3± 0.5 seconds or +260±5℃ for 10±1 seconds.	No interference in operation
3	Terminal Mechanical Strength	The force 10 seconds of 9.8N (1.0kg) is applied to each terminal in axial direction.	No damage and cutting off
4	Vibration	Buzzer shall be measured after being applied vibration of amplitude of 1.5mm with 10 to 55hz band of vibration frequency to each of 3 per-pendicular directions for 2 hours. .	The value of oscillation frequency/ current consumption should be in 10% compared with initial ones .The SPL

5	Drop test	The part only shall be dropped from a height of 75cm onto a 40mm thick wooden board 3 times in 3 axes (X.Y.Z). (a total of 9 times). .	should be in ± 10dB compared with initial one.

Operation Environment Specifications

No	Item	Test Condition	Evaluation standard
1	High temp. test	After being placed in a chamber at +90℃ for 240 hours	Being placed for 4 hours at +25℃, buzzer shall be measured. The value of oscillation frequency/ current consumption should be in ±10% compared with initial ones .The SPL should be in ±10dB compared with initial one.
2	Low temp. test	After being placed in a chamber at –40℃ for 240 hours	
3	Humidity test	After being placed in a chamber at +40℃ and 90±5% relative humidity for 240 hours	
4	Temp. cycle test	The part shall be subjected to 5 cycles. One cycle shall be consist of : 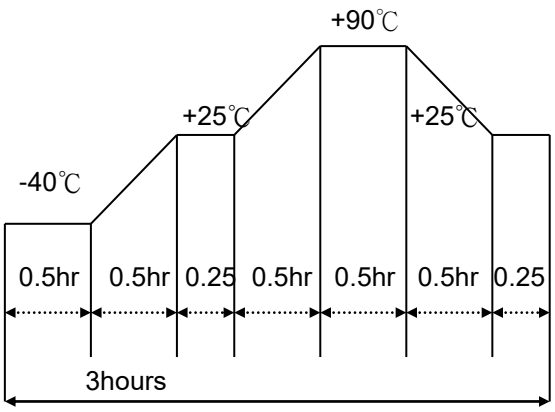	

RELIABILITY TEST

No.	Item	Test condition	Evaluation
1	Operating life test	1.Continuous life test 48 hours continuous operation at +70℃with rated voltage applied. 2.Intermittent life test A duty cycle of 1 minute on, 1 minutes off, a minimum of 5000 times at room temp.(+25 ±2℃)and rated voltage applied	Being placed for 4 hours at +25℃, buzzer shall be measured. The value of oscillation frequency/ current consumption should be in ±10% compared with initial ones .The SPL should be in ±10dB compared with initial one.

TEST CONDITION.

Standard Test Condition:a) Temperature : +5 ~ +35℃ b) Humidity : 45-85% c) Pressure : 860-1060mbar

Judgment Test Condition:a) Temperature : +25 ± 2℃ b) Humidity : 60-70% c) Pressure : 860-1060mbar