* = Conical form tapering downward.
Untoleranced dimensions per GTA 13/5 DIN 1688

OPTIONAL ACCESSORIES		
PART NAME	QTY.	AVILABILITY
MOUNTING PLATE	1	Y
EXTERNAL HINGE	-	N
INTERNAL HINGE	-	N
MOUNTING BRACKETS	-	N
NEOPRENE/SILICON GASKET	1	Y
DIN RAIL TS15	1	Y
DIN RAIL TS35	-	N

LID

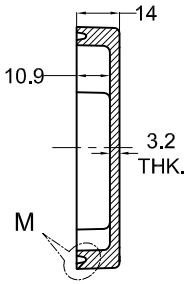

SECTION C-C

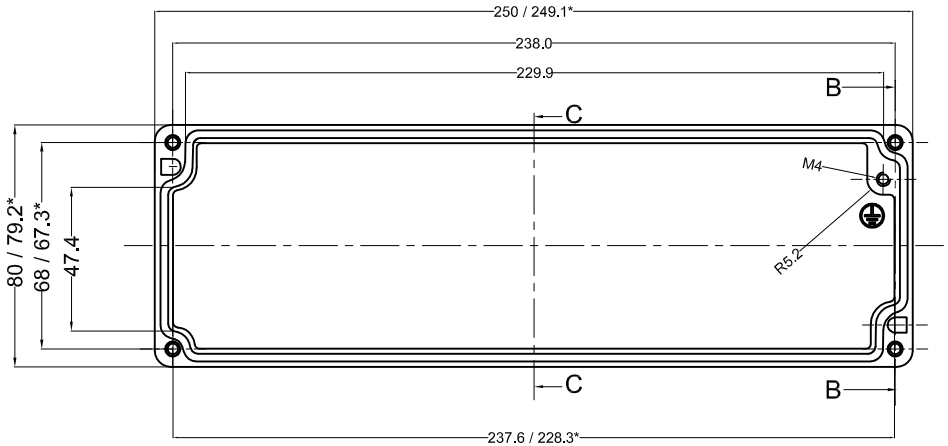

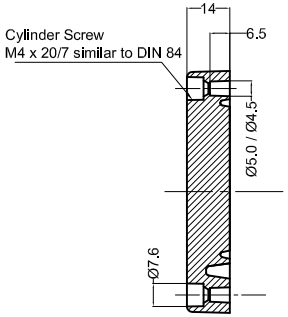

SECTION B-B

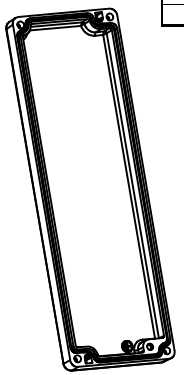

BASE

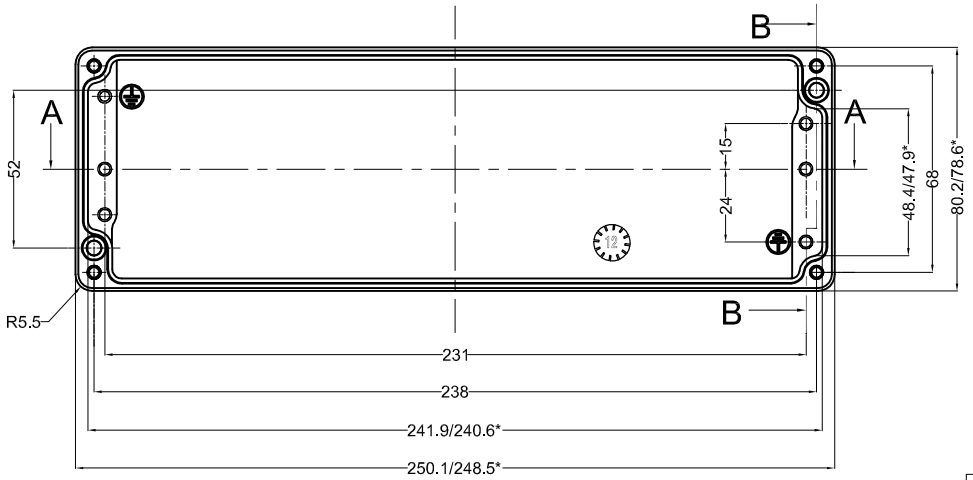

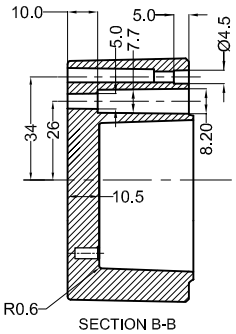

SECTION B-B

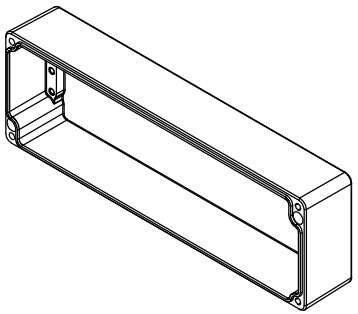

QUANTITY	MATERIAL :-	MACH.NAME	DATE	SIGN	NAME	
1	AlSi12 DIN230	-			RRPL	DESIGN
		TITLE :-	09/06/12		MANOJ	DRAWN
	WEIGTH : - / FINISH : NATURAL	EMPTY ALUMINIUM ENCLOSURE 250 x 80 x 57	09/06/12		PAVAN	CHECKED
TOLERANCE			——		S.D.	APPROVED
±0.2 DIMENSIONS		RS Components Ltd	SCALE			
±0.2 HOLES	ALL DIMENSION ARE IN MM		REV 01		DRG. NO. 7608945	
±1.0° ANGLES	RJ 08					