ENGLISH

Datasheet

S9/BBB STEREO MINIJACK 3.5mm PCB

Stock Number: 913-1018

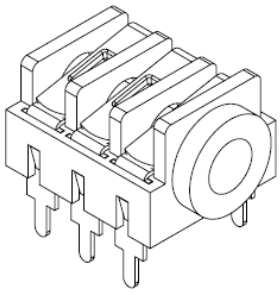

Specifications

- Withstand Voltage: 2000V dc min.
- Maximum Current: 5A
- Temperature Range: -10°C to +70°C
- Life (minimum): 5000+ Operations
- Contact Resistance: <50mΩ

Dimensions: mm

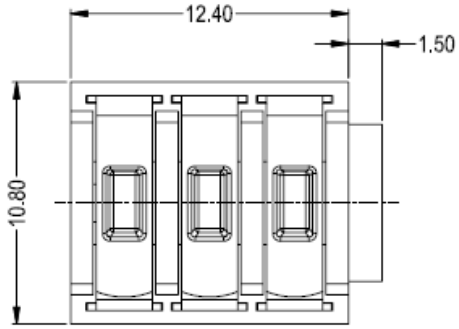

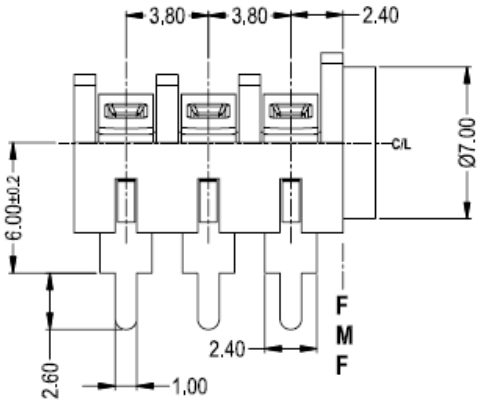

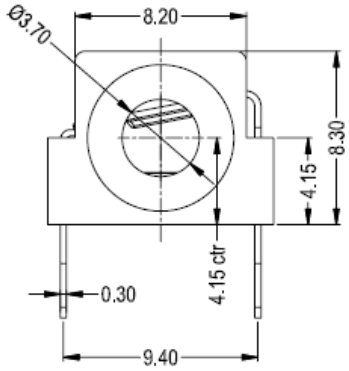

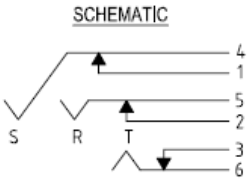

SWITCH CONTACTS OPEN WHEN PLUG IS INSERTED, CLOSE WHEN PLUG IS WITHDRAWN.

RS, Professionally Approved Products, gives you professional quality parts across all products categories. Our range has been testified by engineers as giving comparable quality to that of the leading brands without paying a premium price.