1 way spring terminal 2.54mm top entry

Type No:MX422-254
Order No:MX422-254xx

RoHS Compliant

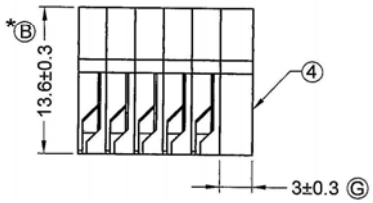

PCB Layout

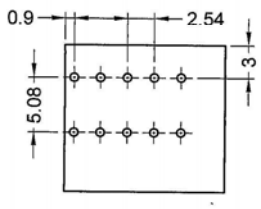

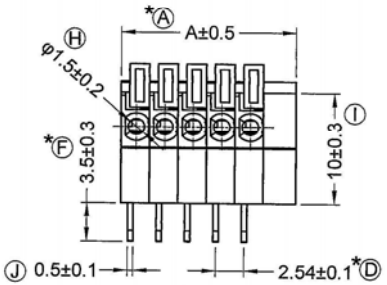

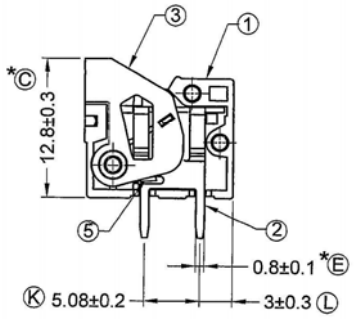

Pitch : 2.54mm (0.100inch)					
Poles	A(mm)	A(inch)	Poles	A(mm)	A(inch)
1	5.54	0.218	14	38.56	1.518
2	8.08	0.318	15	41.10	1.618
3	10.62	0.418	16	43.64	1.718
4	13.16	0.518	17	46.18	1.818
5	15.70	0.618	18	48.72	1.918
6	18.24	0.718	19	51.26	2.018
7	20.78	0.818	20	53.80	2.118
8	23.32	0.918	21	56.34	2.218
9	25.86	1.018	22	58.88	2.318
10	28.40	1.118	23	61.42	2.418
11	30.94	1.218	24	63.96	2.518
12	33.48	1.318	25	66.50	2.618
13	36.02	1.418			

Current rating : 6Amp 150V
Insulation withstands volt : AC2000V min
Insulation resistance : >2000MΩ DC500V
Operation temperature : -40°C to +105°C
Wire range : 20~26 AWG
Wire strip length : 10mm

文件管制
MAY 30, 2013
文管中心

CONFIRMED & ACCEPTED BY:

	Material		Plating/Finish	Remark
1	Insulating body	Polyamide 66(UL94V-0)		Green
2	Terminal	Brass	Tin plated	
3	Lever	Polyamide 66(UL94V-0)		Orange
4	Cover	Polyamide 66(UL94V-0)		Green
5	Spring	Stainless strip steel		

DESIGN	CHECK	APPROVE	PART NAME	UNIT	SCALE
			Terminal Blocks	MM	
DATE 2013/05/30	DATE 2013/05/30	DATE 2013/05/30	DRAWING NO. MX422-254xx		SHEET 2 / 2

F
REV.

THIS DRAWING CONTAINS INFORMATION THAT IS PROPRIETARY TO DECA SWITCHLAB INC AND SHOULD NOT BE USED WITHOUT WRITTEN PERMISSION. (本圖未經許可 禁止翻印 保留或閱讀者必究)