ISO B/STEEL

ACCIAIO
STEEL
STAHL
ACIER

Caratteristiche tecniche I

- Norma: ISO 7241 B (escluso DN30)
- Occlusione: valvola
- Aggancio: sfere radiali
- Materiale: acciaio
- Finitura: Zn-Fe (Cr III)
- Filettature: BSP-NPT-SAE
- Guarnizioni standard: NBR
- Temperatura d'esercizio: -25°C+100°C
- Guarnizioni opzionali: FKM,FFKM,EPDM o altro.
- Pressioni di esercizio: 100-500 bar
- Connessione in pressione residua: non consentita

Technical data E

- Standard: ISO 7241 B (except DN30)
- Occlusion: poppet
- Locking: radial balls
- Material: steel
- Finishing: Zn-Fe (Cr III)
- Threads: BSP-NPT-SAE
- Standard seals: NBR
- Working temperature: -25°C+100°C
- Optional seals: FKM,FFKM,EPDM or more.
- Working pressure: 100-500 bar
- Connection under resdual pressure: not allowed

Technische Merkmale D

- Norm: ISO 7241 B (außer DN30)
- Verschluss: ventil
- Verriegelung: Stahlkugeln
- Werkstoff: Stahl
- Ausführung: Zn-Fe (Cr III)
- Gewinde: BSP-NPT-SAE
- Standard-Dichtungen: NBR
- Betriebstemperatur: -25°C+100°C
- Dichtungen nach Wahl: FKM,FFKM,EPDM,usw.
- Betriebsdruck: 100-500 bar
- Kuppeln unter Restdruck: nicht möglich

Caractéristiques techniques F

- Norme: ISO 7241 B (sauf DN30)
- Obturation: clapet
- Accrochage: billes radiales
- Matériel: acier
- Traitement: Zn-Fe (Cr III)
- Taraudage: BSP-NPT-SAE
- Joints standard: NBR
- Température de service: -25°C+100°C
- Joints facultatifs: FKM,FFKM,EPDM,ect.
- Pression de service: 100-500 bar
- Connexion sous pression résiduelle: pas possible

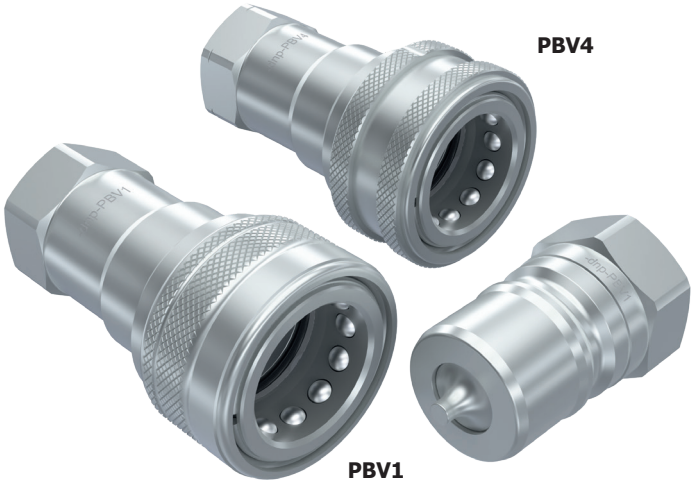

Nominal size				Max working pressure	Rated flow	Max flow rate	Min burst pressure			Fluid spillage
DNP	BG	ISO	mm	MPa	l/min	l/min	Male MPa	Female MPa	Coupled MPa	cc
04	0	5	4.2	50	3	9	240	230	270	0.50
06	1	6.3	6.5	25	12	24	110	180	100	1.00
10	2	10	8.5	25	23	46	140	140	130	2.40
13	3	12.5	10.5	25	45	90	110	140	110	3.90
20	4	19	15.8	25	100	220	100	130	120	11.00
25	5	25	17.3	25	189	260	100	110	100	19.00
30	6	31.5	26.7	20	288	480	80	80	80	48.00
39	7	38	36	20	375	757	80	80	80	95.00
50	8	51	50	10	757	1000	40	40	40	170.00

1 MPa = 145.04 psi • 1 l = 0.264 gal

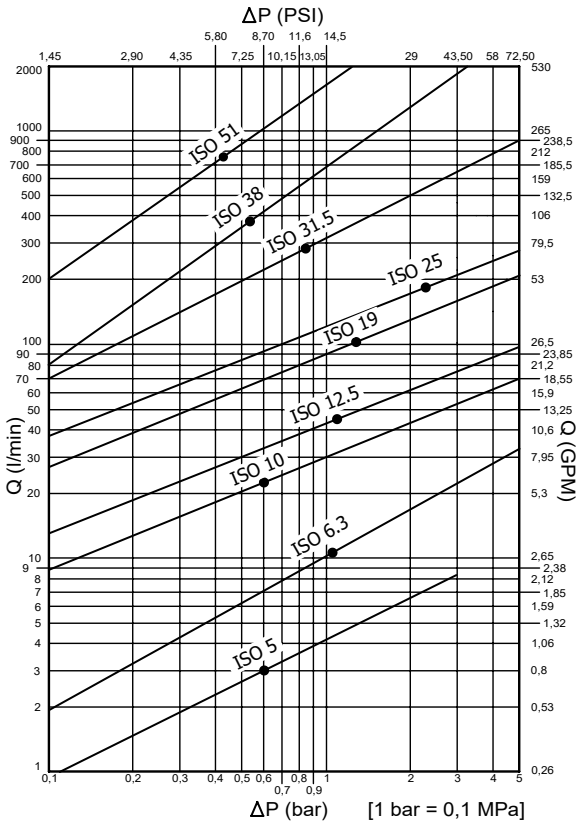

PBV1 DN04 - BG 0 - ISO 5

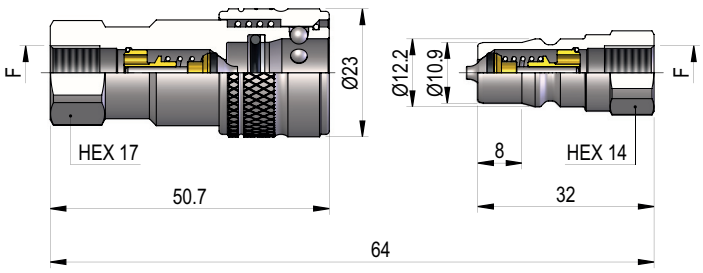

THREADS	F	STANDARD	FEMMINA - FEMALE - MUFFE - FEMELLE			MASCHIO - MALE - STECKER - MALE		
			COD. F	Weight (g)	Packaging (pcs)	COD. M	Weight (g)	Packaging (pcs)
IG 1	BSP 1/8"	DIN 3852-2	PBV1.0404.002	89	160	PBV1.0404.003	20	500
	NPT 1/8"	ANSI B1.20.1	PBV1.0404.012	89	160	PBV1.0404.013	20	500

PBV1 DN06 - BG 1 - ISO 6.3

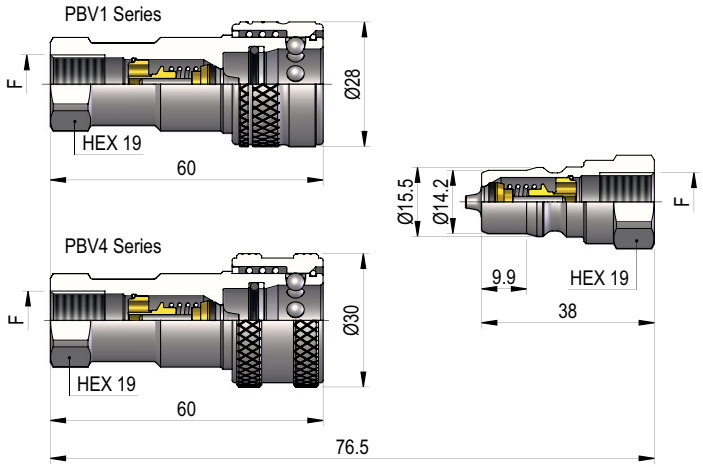

THREADS	F	STANDARD	FEMMINA - FEMALE - MUFFE - FEMELLE			MASCHIO - MALE - STECKER - MALE		
			COD. F	Weight (g)	Packaging (pcs)	COD. M	Weight (g)	Packaging (pcs)
IG 1	BSP 1/4"	DIN 3852-2	PBV1.0606.002	123	100	PBV1.0606.003	39	300
	NPT 1/4"	ANSI B1.20.1	PBV1.0606.012	124	100	PBV1.0606.013	40	300
	BSP 1/4"	DIN 3852-2	PBV4.0606.002	133	80			
	NPT 1/4"	ANSI B1.20.1	PBV4.0606.012	134	80			

THREADS

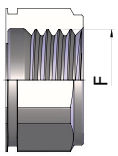

IG 1

PBV1 DN10 - BG 2 - ISO 10

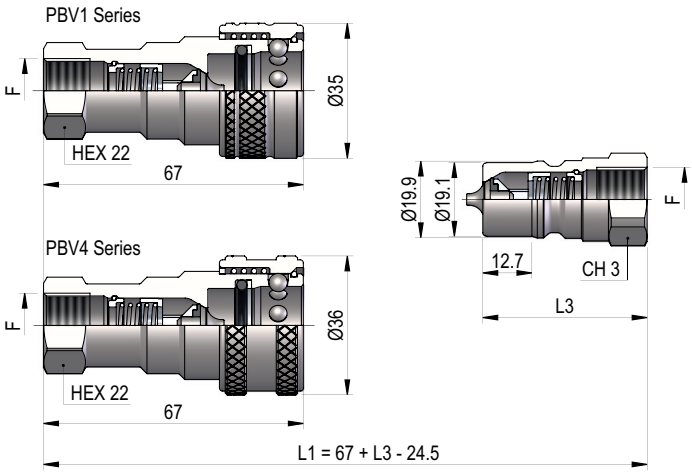

THREADS	CH3	L3	F	STANDARD	FEMMINA - FEMALE - MUFFE - FEMELLE			MASCHIO - MALE - STECKER - MALE		
					COD. F	Weight (g)	Packaging (pcs)	COD. M	Weight (g)	Packaging (pcs)
IG 1	22	42.5	BSP 3/8"	DIN 3852-2	PBV1.1010.002	194	54	PBV1.1010.003	61	200
	22	42.5	NPT 3/8"	ANSI B1.20.1	PBV1.1010.012	196	54	PBV1.1010.013	62	200
	22	42.5	BSP 3/8"	DIN 3852-2	PBV4.1010.002	198	40			
	22	42.5	NPT 3/8"	ANSI B1.20.1	PBV4.1010.012	200	40			
IG 2	27	46	3/4"-16 UNF 2B	SAE J 1926-1				PBV1.1019.033	82	150

PBV1 DN13 - BG 3 - ISO 12.5

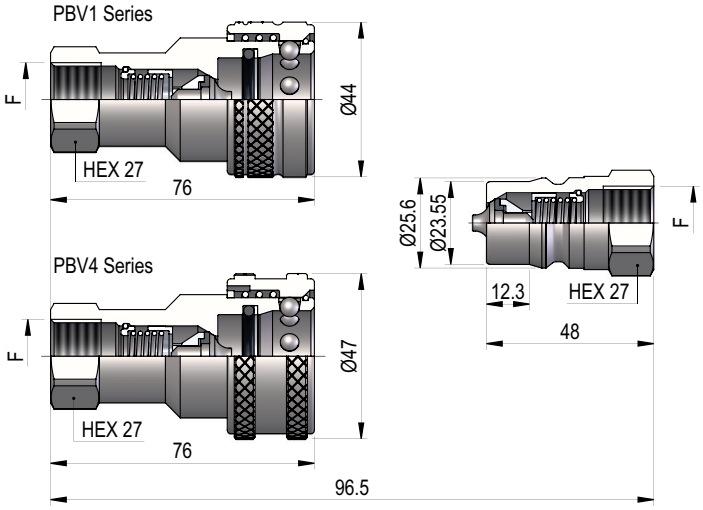

THREADS	F	STANDARD	FEMMINA - FEMALE - MUFFE - FEMELLE			MASCHIO - MALE - STECKER - MALE		
			COD. F	Weight (g)	Packaging (pcs)	COD. M	Weight (g)	Packaging (pcs)
IG 1	BSP 1/2"	DIN 3852-2	PBV1.1313.002	346	45	PBV1.1313.003	112	200
	NPT 1/2"	ANSI B1.20.1	PBV1.1313.012	349	45	PBV1.1313.013	115	200
	BSP 1/2"	DIN 3852-2	PBV4.1313.002	373	30			
	NPT 1/2"	ANSI B1.20.1	PBV4.1313.012	376	30			

THREADS

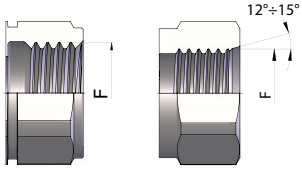

IG 1 IG 2

PBV1 DN20 - BG 4 - ISO 19

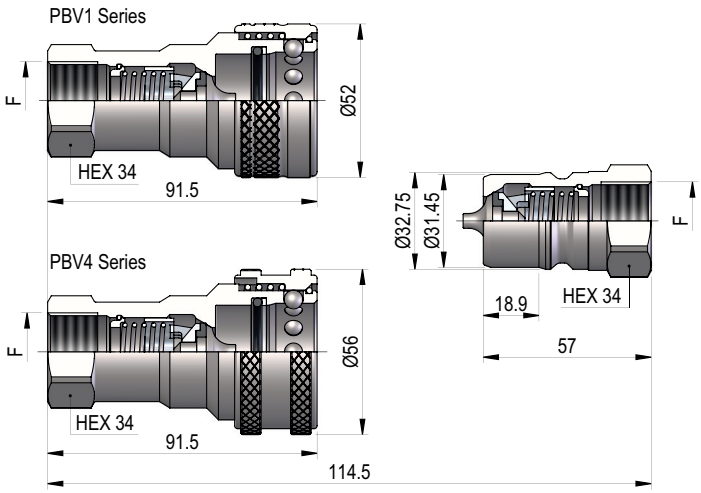

THREADS	F	STANDARD	FEMMINA - FEMALE - MUFFE - FEMELLE			MASCHIO - MALE - STECKER - MALE		
			COD. F	Weight (g)	Packaging (pcs)	COD. M	Weight (g)	Packaging (pcs)
IG 1	BSP 3/4"	DIN 3852-2	PBV1.2019.002	548	25	PBV1.2019.003	202	45
	NPT 3/4"	ANSI B1.20.1	PBV1.2019.012	551	25	PBV1.2019.013	207	45
	BSP 3/4"	DIN 3852-2	PBV4.2019.002	593	20			
	NPT 3/4"	ANSI B1.20.1	PBV4.2019.012	596	20			

PBV1 DN25 - BG 5 - ISO 25

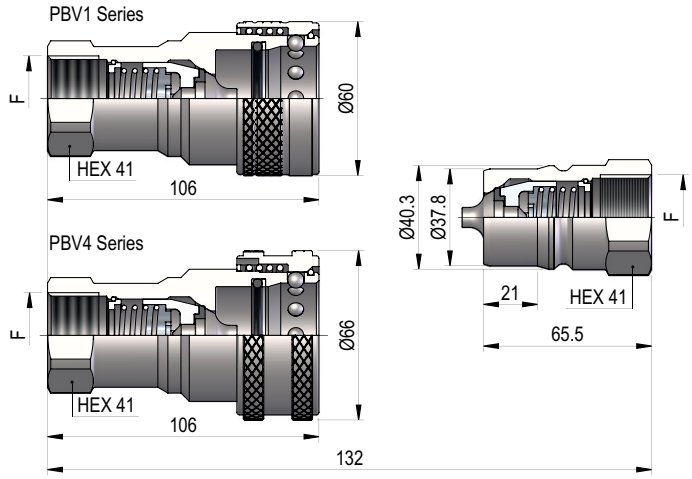

THREADS	F	STANDARD	FEMMINA - FEMALE - MUFFE - FEMELLE			MASCHIO - MALE - STECKER - MALE		
			COD. F	Weight (g)	Packaging (pcs)	COD. M	Weight (g)	Packaging (pcs)
IG 1	BSP 1"	DIN 3852-2	PBV1.2525.002	860	18	PBV1.2525.003	355	30
	NPT 1"	ANSI B1.20.1	PBV1.2525.012	870	18	PBV1.2525.013	364	30
	BSP 1"	DIN 3852-2	PBV4.2525.002	990	15			
	NPT 1"	ANSI B1.20.1	PBV4.2525.012	1000	15			

THREADS

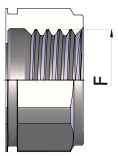

IG 1

PBV1 DN30 - BG 6 - ISO 31.5

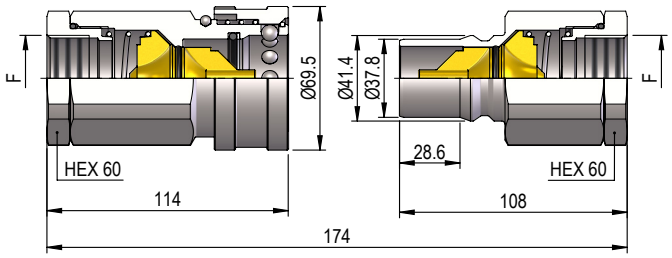

THREADS	F	STANDARD	FEMMINA - FEMALE - MUFFE - FEMELLE			MASCHIO - MALE - STECKER - MALE		
			COD. F	Weight (g)	Packaging (pcs)	COD. M	Weight (g)	Packaging (pcs)
IG 1	BSP 1"¼	DIN 3852-2	PBV1.3031.112	1730	12	PBV1.3031.113	1030	12
	NPT 1"¼	ANSI B1.20.1	PBV1.3031.012	1750	12	PBV1.3031.013	1050	12

PBV1 DN39 - BG 7 - ISO 38

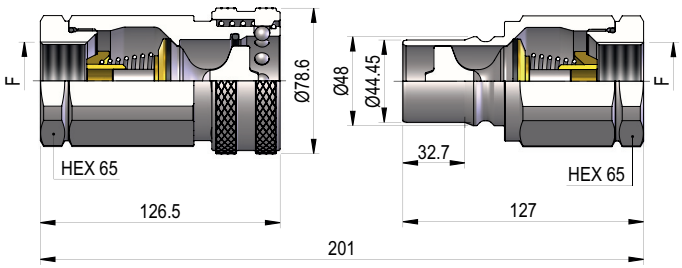

THREADS	F	STANDARD	FEMMINA - FEMALE - MUFFE - FEMELLE			MASCHIO - MALE - STECKER - MALE		
			COD. F	Weight (g)	Packaging (pcs)	COD. M	Weight (g)	Packaging (pcs)
IG 1	BSP 1"¼	DIN 3852-2	PBV1.3931.002	2132	9	PBV1.3931.003	1340	12
	NPT 1"¼	ANSI B1.20.1	PBV1.3931.012	2147	9	PBV1.3931.013	1355	12
	BSP 1"½	DIN 3852-2	PBV1.3939.002	2050	9	PBV1.3939.003	1258	12
	NPT 1"½	ANSI B1.20.1	PBV1.3939.012	2066	9	PBV1.3939.013	1274	12
IG 2	1"5/8-12 UN 2B	SAE J 1926-1	PBV1.3941.032	2139	9	PBV1.3941.033	1347	12

PBV1 DN50 - BG 8 - ISO 51

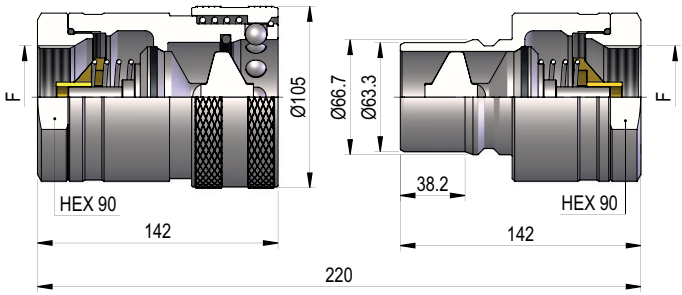

THREADS	F	STANDARD	FEMMINA - FEMALE - MUFFE - FEMELLE			MASCHIO - MALE - STECKER - MALE		
			COD. F	Weight (g)	Packaging (pcs)	COD. M	Weight (g)	Packaging (pcs)
IG 1	BSP 2"	DIN 3852-2	PBV1.5051.002	4900	4	PBV1.5051.003	3100	5
	NPT 2"	ANSI B1.20.1	PBV1.5051.012	5000	4	PBV1.5051.013	3200	5

THREADS

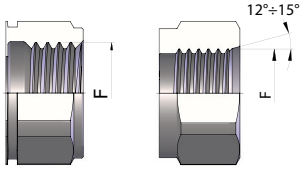

IG 1 IG 2

PLASTIC CAPS

NOMINAL SIZE			FEMALE DUST PLUG					MALE DUST CAP					COLOR	MATERIAL
				Dimensions			Weight		Dimensions			Weight		
DNP	BG	ISO	COD. F	D	L	D1	(g)	COD. M	D	L	D1	(g)		
06	1	6.3	SPBV.06032	28	123	20.5	8	SPBV.06033	19.5	123	17	8		PVC
10	2	10	SPBV.10032	33	150	25	10	SPBV.10033	25	127	20	13		PVC
13	3	12.5	SPBV.13032	44.5	174	31.5	16	SPBV.13033	31	160	24.5	20		PVC
20	4	19	SPBV.20032	52	185	37	23	SPBV.20033	37	190	30.5	27		PVC
25	5	25	SPBV.25032	61.5	225	43	30	SPBV.25033	45	230	37	40		PVC

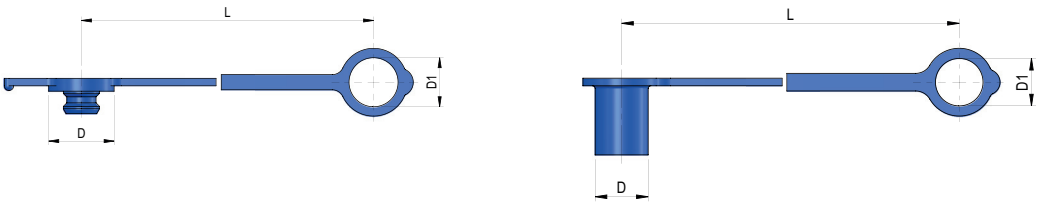

NOMINAL SIZE			FEMALE DUST PLUG					MALE DUST CAP					COLOR	MATERIAL
				Dimensions			Weight		Dimensions			Weight		
DNP	BG	ISO	COD. F	D	L	D1	(g)	COD. M	D	L	D1	(g)		
06	1	6.3	SPBV.06002	26	206	21	14	SPBV.06003	19	206	21	13		PVC
06	1	6.3	SPBV.06042	26	206	21	14	SPBV.06043	19	206	21	13		PVC
10	2	10	SPBV.10002	33	206	23	18	SPBV.10003	23	206	23	16		PVC
13	3	12.5	SPBV.13002	38	240	28	24	SPBV.13003	29	240	28	22		PVC
20	4	19	SPBV.20002	50	270	41	33	SPBV.20003	36	270	41	29		PVC
25	5	25	SPBV.25002	60	275	43	42	SPBV.25003	45	275	43	40		PVC

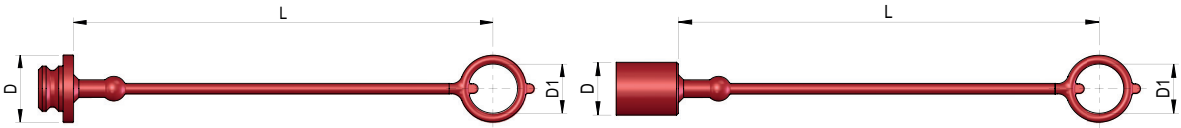

METAL CAPS

NOMINAL SIZE			FEMALE DUST PLUG					MALE DUST CAP					MATERIAL
				Dimensions			Weight		Dimensions			Weight	
DNP	BG	ISO	COD. F	D	L	D1	(g)	COD. M	D	L	D1	(g)	
06	1	6.3	SPBV.06202	22	170	22	15	SPBV.06203	22	170	22	32	Aluminum
10	2	10	SPBV.10202	22	170	22	18	SPBV.10203	27	170	22	34	Aluminum
13	3	12.5	SPBV.13202	28.5	172	27	34	SPBV.13203	35	172	27	66	Aluminum
20	4	19	SPBV.20202	35	225	30	49	SPBV.20203	41.5	225	30	102	Aluminum
25	5	25	SPBV.25202	44.5	280	41	70	SPBV.25203	48	280	41	126	Aluminum

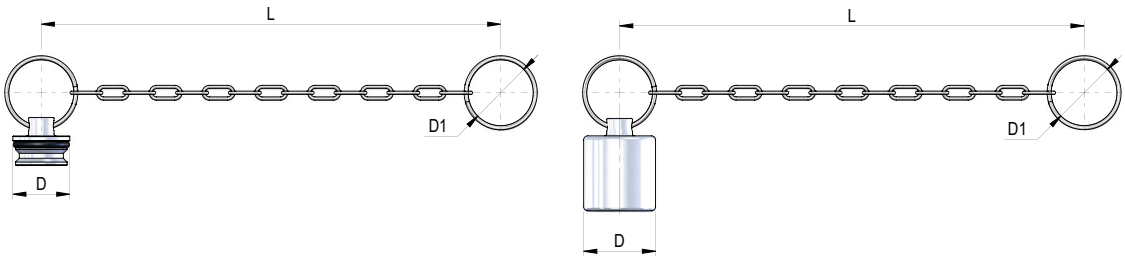

segue/follows/folgt/suite

NOMINAL SIZE			FEMALE DUST PLUG					MALE DUST CAP					MATERIAL
				Dimensions			Weight		Dimensions			Weight	
DNP	BG	ISO	COD. F	D	L	D1	(g)	COD. M	D	L	D1	(g)	
39	7	38	SPBV.39202	79	225	70.5	139	SPBV.39203	64.5	225	70.5	293	Aluminum
50	8	51	SPBV.50202	105	350	100	265	SPBV.50203	80	350	100	365	Aluminum

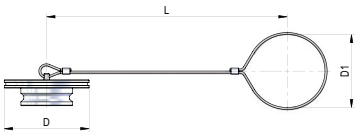

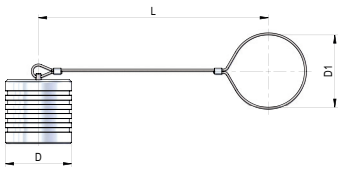

SPARE PARTS

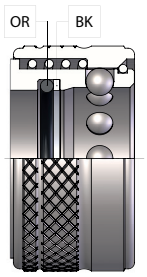

NOMINAL SIZE			FEMALE GASKET	
DNP	BG	ISO	OR (NBR*)	BK (PTFE)
04	0	5	PBV.004.120	PBV.004.130
06	1	6.3	PBV.006.120	PBV.006.130
10	2	10	PDV.010.120	PBV.010.130
13	3	12.5	PBV.013.120	PBV.013.130
20	4	19	PBV.019.120	PBV.019.130
25	5	25	PBV.025.120	PBV.025.130
30	6	31.5	PBV.025.120	PBV.025.130
39	7	38	PBV.039.120	-
50	8	51	PBV.050.120	-

*AL CODICE DELLA GUARNIZIONE IN NBR AGGIUNGERE 'E' PER EPDM O 'V' PER VITON
*TO THE NBR GASKET CODE ADD 'E' FOR EPDM OR 'V' FOR VITON
*ZU DER ARTIKELNR. DER NBR DICHTUNG GEBEN SIE 'E' FUER EPDM ODER 'V' FUER VITON AN
*AU CODE DU JOINT EN NBR JOINDRE 'E' POUR EPDM OU 'V' POUR VITON