AA632

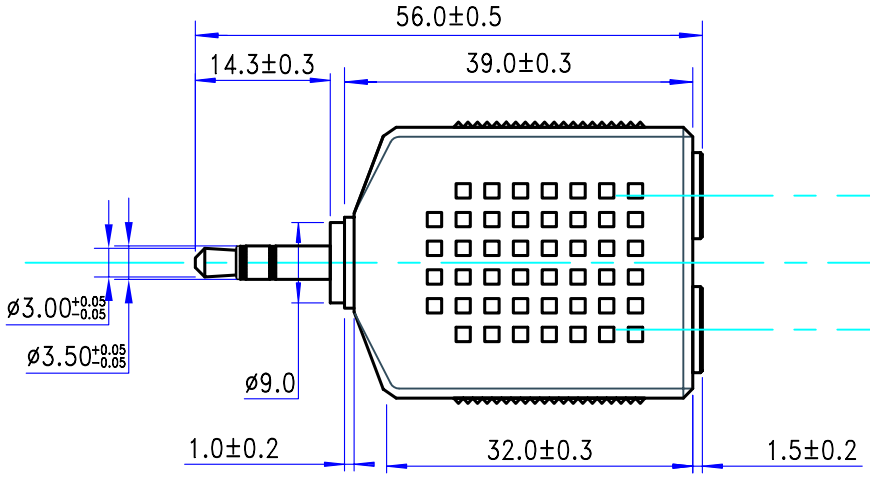

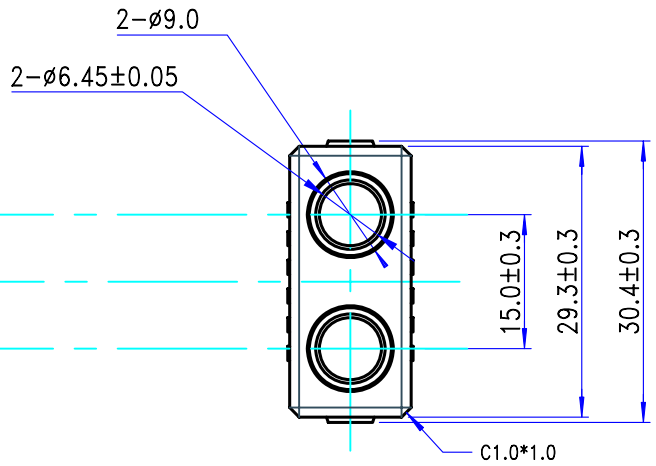

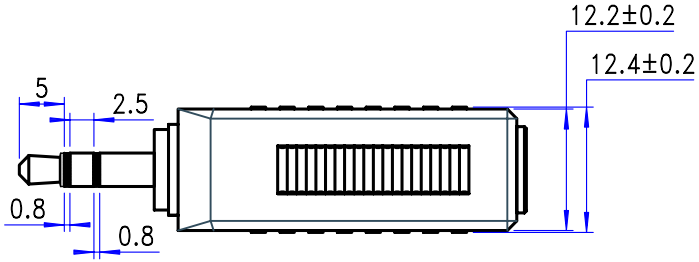

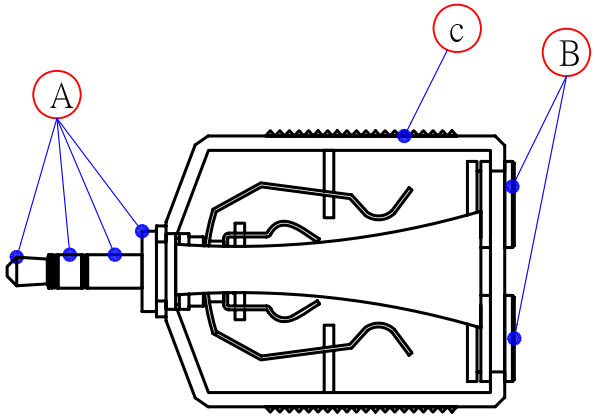

INSIDE VIEW

TITLE: 3.5SP TO 2*6.3SJ

Unless Specified,otherwise tolerance are +/-0.1mm; Remark:ROHS Requirement Applied(符合ROHS)

NO	Description	Unit	Materials	Finish/Color	PART NO.
A.	3. 5SP	1	BRASS	NI	
B.	6. 3SJ	2	BRASS	NI	
C.	BODY	1	ABS	B	
D.					
E.					

REV	DESCRIPTION	Issue	A	DATE:	2007/12/3
1					
2					
3					

Approved	
Check	
Drawn	李傑
Unit	M/M
Scale	1:1