This Question Paper contains 20 printed pages.
(Part - A & Part - B)

Sl.No.

12 (E)

(MARCH, 2018)

પ્રશ્ન પેપરનો સેટ નંબર જેની સામેનું વર્તુળ OMR શીટમાં ઘટ્ટ કરવાનું રહે છે.
Set No. of Question Paper, circle against which is to be darken in OMR sheet.
01

Part - A : Time : 1 Hour / Marks : 50

Part - B : Time : 2 Hours / Marks : 50

(Part - A)

Time : 1 Hour] ***[Maximum Marks : 50***

Instructions :

1) **There are 50 objective type (M.C.Q) questions in Part - A and all questions are compulsory.**
2) **The questions are serially numbered from 1 to 50 and each carries 1 mark.**
3) **Read each question carefully, select proper alternative and answer in the O.M.R. sheet.**
4) **The OMR sheet is given for answering the questions. The answer of each question is represented by (A) O, (B) O, (C) O, (D) O. Darken the circle ● of the correct answer with ball-pen.**
5) **Rough work is to be done in the space provided for this purpose in the Test Booklet only.**
6) **Set No. of Question Paper printed on the upper-most right side of the Question Paper is to be written in the column provided in the OMR sheet.**

Rough Work

1) For the graph, in the figure, $y = P(x)$ has _____ zero/zeros.

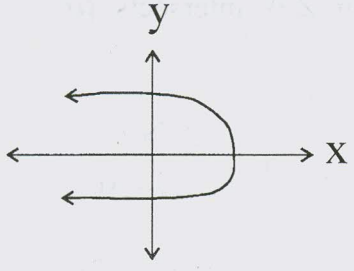

(A) 3 (B) 1

(C) 2 (D) 4

Rough Work

2) Discriminant is _____ for the equation $5x - 6 = -\frac{1}{x}$

(A) -56 (B) 16

(C) -16 (D) 0

3) The terminating decimal expansion of the number $\frac{337}{125}$ is _____.

(A) 2.666 (B) 2.966

(C) 2.696 (D) 2.698

4) For A.P., $S_n - 2S_{n-1} + S_{n-2} =$ _____.

(A) $2d$ (B) a

(C) d (D) $a + d$

5) If the roots of the quadratic equation $6x^2 - 13x + m = 0$ are reciprocal numbers of each other then $m =$ _____.

(A) -13 (B) 13

(C) -6 (D) 6

6) In ΔABC, $\overrightarrow{AD}$ the bisector of $\angle A$ intersects $\overline{BC}$ in D. $\therefore BD =$ _____.

(A) $\frac{BC \times AB}{AB + AC}$ (B) $\frac{BC \times AB}{AB - AC}$

(C) $\frac{BC \times AB}{AC - AB}$ (D) $\frac{AB + AC}{BC \times AB}$

Rough Work

7) In the following figure, all the vertically opposite angles formed, are right angles. The Perimeter of the coplanar figure is _____ .

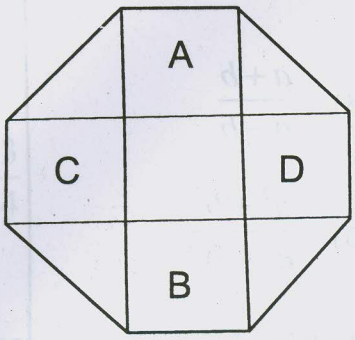

Symbol	Shape	Area
A and B	Square	9 cm^2
C and D	Square	16 cm^2

(A) 34 cm (B) 26 cm

(C) 40 cm (D) 25 cm

8) A(0, 0), B(3, 0), C(3, 4) are the vertices of _____ triangle .

(A) right angled (B) equilateral

(C) acute angled (D) isosceles

9) Point P, on line segment joining the points A(1, 2) and B(3, –2), divides in the ratio 1:1, the coordinates of P are _____.

(A) (2, 1) (B) (–1, 0)

(C) (2, 0) (D) (0, 0)

10) If $\tan 5\theta \cdot \tan 4\theta = 1$ then θ = _____.

(θ is an acute angle).

(A) 7 (B) 3

(C) 10 (D) 9

Rough Work

11) For acute angle θ, $b\sin\theta = a\cos\theta$.

$\therefore \dfrac{a\sin\theta - b\cos\theta}{a\sin\theta + b\cos\theta} =$ _____ .

(A) $\dfrac{a-b}{a+b}$ (B) $\dfrac{a+b}{a-b}$

(C) $\dfrac{a^2-b^2}{a^2+b^2}$ (D) $\dfrac{a^2+b^2}{a^2-b^2}$

12) M is the foot of perpendicular on Y-axis from P(–3, 2). Coordinates of M are _____.

(A) (–3, 0) (B) (3, 0)

(C) (–3, 3) (D) (0, 2)

13) If g.c.d. (24, 20) = $3x + 1$ then $x =$ _____.

(A) $\dfrac{5}{3}$ (B) $\dfrac{3}{5}$

(C) 1 (D) $\dfrac{239}{3}$

14) In the following figure, $m\angle SRQ =$ _____.

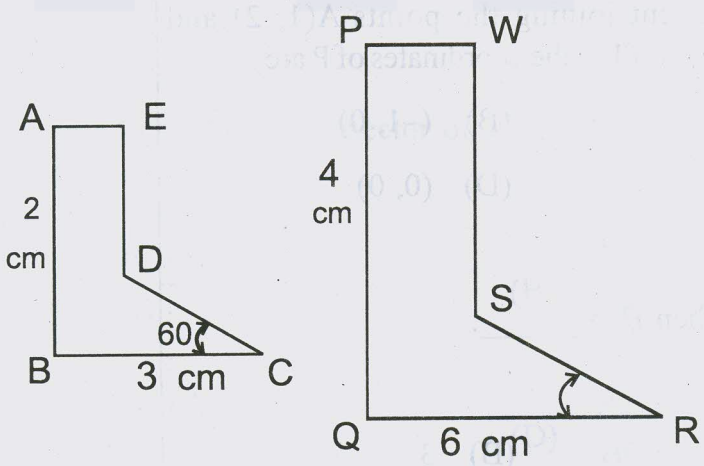

(A) 30 (B) 45

(C) 38 (D) 60

Rough Work

15) If the pair of equations $ax + 2y = 7$ and $2x + 3y = 8$ has unique solution then $a \neq$ _____ .

(A) $\frac{2}{3}$ (B) $\frac{4}{3}$

(C) $\frac{3}{4}$ (D) $-\frac{4}{3}$

16) One root of $Kx^2 + 3x - 4 = 0$ is even prime number. The value of K = _____ .

(A) $\frac{1}{2}$ (B) $-\frac{1}{2}$

(C) 2 (D) -2

17) a, b, c are the sides of ΔABC. If 'a' is the length of the longest side of ΔABC, from the following, _____ pair is true to determine the type of ΔABC.

Pairs:

(1)	$a^2 > b^2 + c^2$	(x)	right angled triangle
(2)	$a^2 < b^2 + c^2$	(y)	obtuse angled triangle
(3)	$a^2 = b^2 + c^2$	(z)	acute angled triangle

(A) $1 \rightarrow x$
$2 \rightarrow y$
$3 \rightarrow z$

(B) $1 \rightarrow y$
$2 \rightarrow z$
$3 \rightarrow x$

(C) $1 \rightarrow z$
$2 \rightarrow y$
$3 \rightarrow x$

(D) $1 \rightarrow y$
$2 \rightarrow x$
$3 \rightarrow z$

Rough Work

18) In a square ABCD, AD = _____.

(A) $\frac{AC}{\sqrt{2}}$

(B) $\frac{\sqrt{2}}{AC}$

(C) $\sqrt{2} \cdot AC$

(D) $\sqrt{\frac{AC}{2}}$

19) If $\sin^2\left(\frac{x+5}{2}\right)+\cos^2\left(\frac{2x}{3}\right) = \tan^2 45$ then x = _____.

(A) $-\frac{15}{7}$

(B) -15

(C) $\frac{15}{7}$

(D) 15

20) One of the end points of a diameter of a circle having centre at origin is A(3, –2). The other end point of the diameter is _____ .

(A) (–3, –2)

(B) $\left(\frac{3}{4},1\right)$

(C) $\left(\frac{3}{2},-1\right)$

(D) (–3, 2)

Rough Work

21) The sum of the zeros of $3x^2 + 5x = 2$ is _____.

(A) $-\frac{5}{3}$ (B) $-\frac{3}{5}$

(C) $-\frac{2}{3}$ (D) $\frac{2}{3}$

22) The sum of 3 consecutive terms of an A.P. is 48. The product of its first and the last term is 252. $\therefore d =$ _____ .

(A) 4

(B) –4

(C) 3

(D) 2

23) A tangent from P, a point in the exterior of $\odot$(O, r), touches the circle at Q. If OP = 13, PQ = 5 then the diameter of the circle = _____.

(A) 24 (B) 12

(C) 13 (D) 10

24) m is the mean of 10 observations. If one observation 'n' is removed, then the new mean is _____.

(A) $\frac{n+10m}{9}$ (B) $\frac{n-10m}{9}$

(C) $\frac{10m+n}{9}$ (D) $\frac{10m-n}{9}$

Rough Work

25)

Class	0-10	10-20	20-30	30-40	40-50
Frequency	7	15	13	17	10

The cumulative frequency of the class 20-30 of the above frequency distribution is _____ .

(A) 35 (B) 13

(C) 28 (D) 40

26) If a, b, c are three consecutive terms of A.P., the Arithmetic mean of a and c is b then b = _____.

(A) $b^2 = ac$ (B) $\frac{a-c}{2}$

(C) $\frac{a+c}{2}$ (D) $\frac{c-a}{2}$

27) $\cos^2\theta + \frac{1}{1+\cot^2\theta}$ = _____ (θ is acute)

(A) 1 (B) 0

(C) -1 (D) 2

28) If the ratio of the height of a tower and the length of its shadow is $1:\sqrt{3}$, then the angle of elevation of the Sun has measure _____.

(A) 30 (B) 60

(C) 45 (D) 90

29) Ogive is graphical representation of _____ in a frequency distribution.

(A) Data

(B) Frequency

(C) Class boundary

(D) Cumulative frequency

Rough Work

30) As observed from the top of the light house, the angles of depression of two ships P and Q, anchored in the sea to the same side of the light house, are found to have measures 35° and 50° respectively. Then from the light house _____ .

(A) P and Q are at equal distance

(B) The distance of Q is more than P

(C) The distance of P is more than Q

(D) The relation about distance of P and Q cannot be determined

31) On walking _____ meters on a hill making an angle of measure 30° with the ground, one can reach the height of '4' / a meters from the ground.

(A) $\frac{a}{4}$ (B) $\frac{4}{a}$

(C) $\frac{a}{8}$ (D) $\frac{8}{a}$

32) ΔABC is right angled. The measures of the sides forming right angle are x and y. The radius of the circle touches all the sides of ΔABC is _____ .

(A) $\frac{x+y-\left(\sqrt{x^2-y^2}\right)}{2}$

(B) $\frac{x+y+\left(\sqrt{x^2+y^2}\right)}{2}$

(C) $\frac{x+y+\left(\sqrt{y^2-x^2}\right)}{2}$

(D) $\frac{x+y-\left(\sqrt{x^2+y^2}\right)}{2}$

Rough Work

33) The product of the zeros of $mx^2 - 5x + 2 = 0$ is 1. The value of m = _____.

(A) 1

(B) 0

(C) 3

(D) 2

34) For $P(x) = 2x^4 - 3x^3 + 7x + 5$, $P(-2)$ = _____.

(A) 47 (B) -1

(C) 27 (D) 0

35) A chord of $\odot(0, 5)$ touches the circle $\odot(0, 3)$. The length of the chord is _____ .

(A) 8 (B) 10

(C) 7 (D) 6

36) $\odot(P, r_1)$ and $\odot(Q, r_2)$ are in a coplaner. If $PQ > r_1 + r_2$, then _____ maximum common tangents can be drawn to the circles.

(A) two (B) three

(C) four (D) one

37) Length of minor arc of $\odot(P, r)$ is l. The area of the sector = _____.

(A) $\frac{1}{2}lr^2$ (B) $\frac{1}{2}l^2r$

(C) $\frac{1}{2}lr$ (D) $\frac{3}{2}lr$

Rough Work

38) From the figure of $\odot(O, r)$, match the following. The correct option is _____.

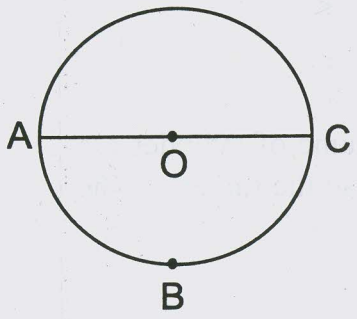

Match:

(1) $\overline{AC} \cup \overset{\frown}{ABC}$ (*a*) $2r$

(2) $\overline{OA}$ length (*b*) r

(3) $\overline{AC}$ length (*c*) $\pi r + 2r$

(A) $1 \rightarrow c$, $2 \rightarrow b$, $3 \rightarrow a$

(B) $1 \rightarrow a$, $2 \rightarrow b$, $3 \rightarrow c$

(C) $1 \rightarrow b$, $2 \rightarrow a$, $3 \rightarrow c$

(D) $1 \rightarrow c$, $2 \rightarrow a$, $3 \rightarrow b$

39) The length of an arc subtending an angle of measure 60° at the centre of the circle, whose area is 616 cm^2 is ____.

(A) $\frac{44}{3}$

(B) 73.3

(C) $\frac{22}{7}$

(D) 3.14

Rough Work

40) l is a tangent of $\odot$(P, 7) touches it at A. If B is a point on l and $A \neq B$ then PB _____ 7.

(A) $>$ (B) $<$

(C) $=$ (D) $\geq$

41) The volume of iron sphere and the volume of cylinder are numerically the same. Their radii are also the same. $\therefore$ The height of cylinder = _____ $\times$ radius.

(A) 3 (B) 4

(C) $\frac{3}{4}$ (D) $\frac{4}{3}$

42) If $\frac{3}{x} - \frac{2}{y} = 5$ and $\frac{4}{x} - \frac{5}{y} = 2$ then $\frac{y-x}{xy}$ = _____.

(A) 4 (B) -1

(C) 5 (D) 1

43) In the following figure, three semicircles are given. If OA = OB = 2cm, then the area of the whole figure = _____ cm^2.

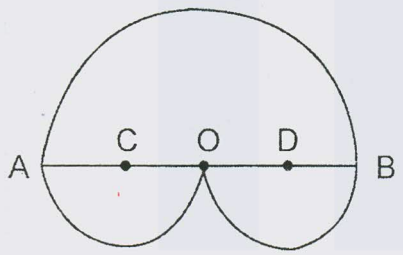

(A) 3π (B) 8π

(C) 10π (D) 12π

44) There is a line in the plane of a circle. There are _____ maximum possibilities about the intersection of the line and the circle.

(A) 2 (B) 1

(C) 4 (D) 3

45) The ratio of the radii of two cones having equal height is 2:3. Then, the ratio of their volumes = _____.

(A) 4:9 (B) 8:27

(C) 3:2 (D) 4:6

Rough Work

46) Volume of a cone = _____ cm^3 with same radius & height of x cm. each.

(A) $\frac{1}{3}\pi r^3$ (B) $\frac{1}{3}\pi x^3$

(C) $\frac{1}{3}\pi h^3$ (D) $\frac{1}{3}\pi r^2 h$

47) In the following figure, hemisphere is placed at the bottom of the plastic bucket, as shown in the figure. If curved surface area of the bucket is A, curved surface area of hemisphere is B, area of the bottom of the bucket is C and total surface area of hemisphere is D then the total surface area of this model is _____ .

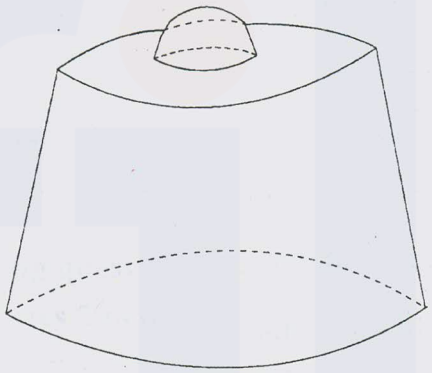

(A) 2A + B + C – D (B) A + B + 2C –D

(C) A + B + C + D (D) A + 2B + C – D

48) For an event A, $P(A) = \frac{7}{20}$ then $P(\bar{A})$ = _____ .

(A) 0 (B) 0.35

(C) 0.65 (D) 1

49) From the question paper you have, the probability of scoring 101 marks is _____ .

(A) 0 (B) 1

(C) 0.5 (D) 0.3

Rough Work

50) 3 squares are represented in the following three figures. For this figure, _____ statement is true.

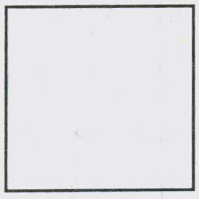

Figure - P

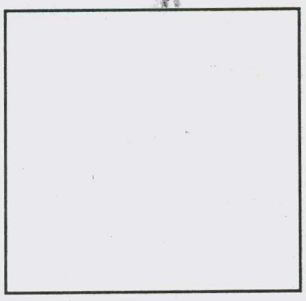

Figure - R



Figure - Q

(A) Figures P, Q and R are Similar

(B) Figures P and Q only are Similar

(C) Figures Q and R only are Similar

(D) Figures P and R only are Similar

12 (E)

(MARCH, 2018)

(Part - B)

Time : 2 Hours] *[Maximum Marks : 50*

Instructions :

1) **Write in a clear handwriting.**
2) **There are four sections in Part - B of the question paper and total 1 to 17 questions are there.**
3) **All the questions are compulsory. Internal options are given.**
4) **The numbers at the right side represent the marks of the questions.**
5) **Draw figure wherever required. Retain all the lines of construction.**
6) **Start new section on new page.**
7) **Maintain Sequence.**

SECTION - A

■ **Answer the following questions with calculations in brief.**
[Each question carries 2 marks].

1) Prove : $\sqrt{23+\sqrt{528}}=2\sqrt{3}+\sqrt{11}$ **[2]**

2) Following polynomial $P(x)$ is divided by $S(x)$. Obtain quotient and remainder. **[2]**

$$P(x)=\frac{2}{3}x^2+5x+6,\ S(x)=x+6$$

3) In the following figure, the measures of the angles are given. Solve them by the method of elimination. **[2]**

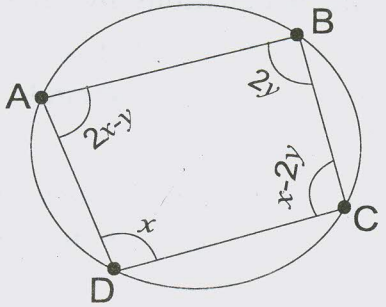

4) In an A.P., $S_n = 5n^2 + 11n$, then find T_n. [2]

OR

4) 5th term of an A.P. is 17. Its 9th term is 35 more than the 2nd term. Find 20th term of the A.P.

5) P and Q are the mid points of $\overline{AB}$ and $\overline{AC}$ respectively in ΔABC. If the area of ΔAPQ is $12\sqrt{3}$ cm^2, then find the area of ΔABC. [2]

6) A (1, 7), B(2, 4) and C(K, 5) are the vertices of right angled triangle with $\angle A$ is right angle. Find the value of K. [2]

OR

6) Prove that P(2, –1), Q(1, –4) and R(3, 2) are collinear points. Which point lies between the other two? Write in symbol.

7) Find the value: [2]

$$\frac{\sin 18}{\cos 72} + \sqrt{3}\ (\tan 10 \cdot \tan 30 \cdot \tan 40 \cdot \tan 50 \cdot \tan 80)$$

8) If M + Z = 75 and M – Z = 1.4, then find its mean, median and mode values. [2]

SECTION - B

■ **Answer the following questions with calculation.**
[Each question carries 3 marks].

9) Solve the following pair of linear equations by cross-multiplication method: [3]

$$\frac{4x+7y}{xy} = 16, \quad \frac{10x+3y}{xy} = 11$$

10) A man on the top of a vertical tower observes a car moving at a uniform speed coming towards it. If it takes 12 minutes for the angle of depression to change its measure from 30° to 45°, how soon after this, will the car reach the tower? [3]

11) Find the mean of the following frequency distribution by the assumed mean method: [3]

No. of apples	50-53	53-56	56-59	59-62	62-65
No. of boxes	20	150	115	95	20

OR

11) Find the median of the following data:

Value of Variable	12	13	14	15	16	17	18	19	20
Frequency	7	10	15	18	20	10	9	8	3

12) A circle is drawn in a triangular board as shown in the figure. [3]

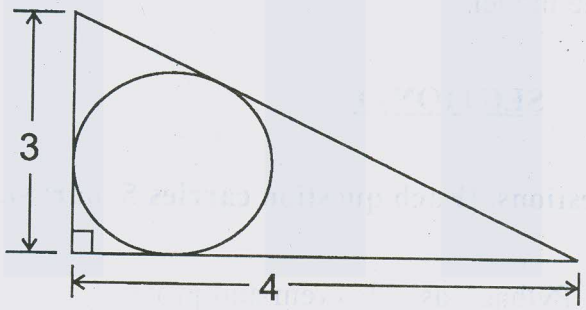

If a ball is thrown to the board, then find the probability of the ball that collide in the interior of the circle.

SECTION - C

■ **Answer the following questions with calculations.**
[Each question of 4 marks].

13) If the price of sugar decreases by ₹5, one can buy 1 kg. more sugar in ₹150, what is the price of the sugar? [4]

14) In the following figure, ABCD is a square. Find the area of shaded region. ($\pi = 3.14$). Each sector is of same area. [4]

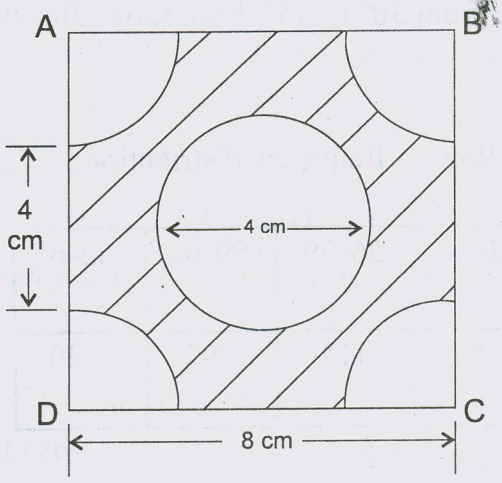

15) In a rectangular paper, its length is 44cm and the breadth is 7cm. By rolling the paper from its length, an open cylinder is formed. If a closed cylinder is taken of the same size, then find its total surface area. [4]

OR

15) Jay prepared a model, from plastic sheet, like a cylinder with two cones attached at both the ends. Total length of the model is 13cm, height of cone is 3cm and the radius of the base of the cone is 4cm. Find the volume of air contained in the model.

SECTION - D

■ **Answer the following questions. [Each question carries 5 marks].**

16) State the converse of Pythagoras' Theorem and prove it. [5]

17) Draw $\overline{AB}$ of length 7.4cm and divide it in the ratio 5:7. Write the construction steps. [5]

OR

17) Circle is given of centre O and radius 3cm. Take a point P such that OP = 7cm. Draw tangents to the circle from point P. Write the construction steps.

✪ ✪ ✪