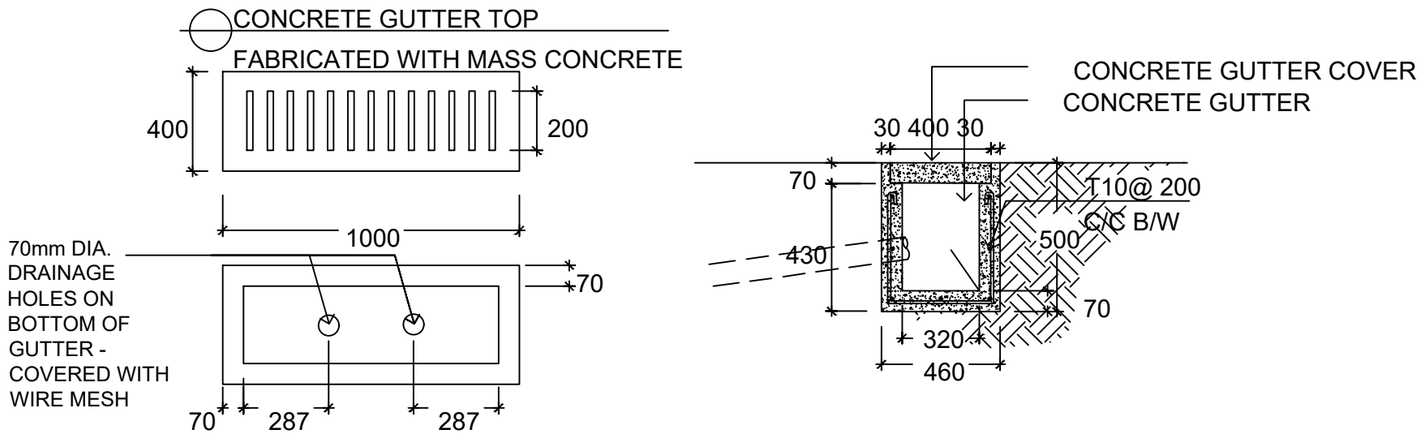

CONCRETE GUTTER
SECTION DETAIL

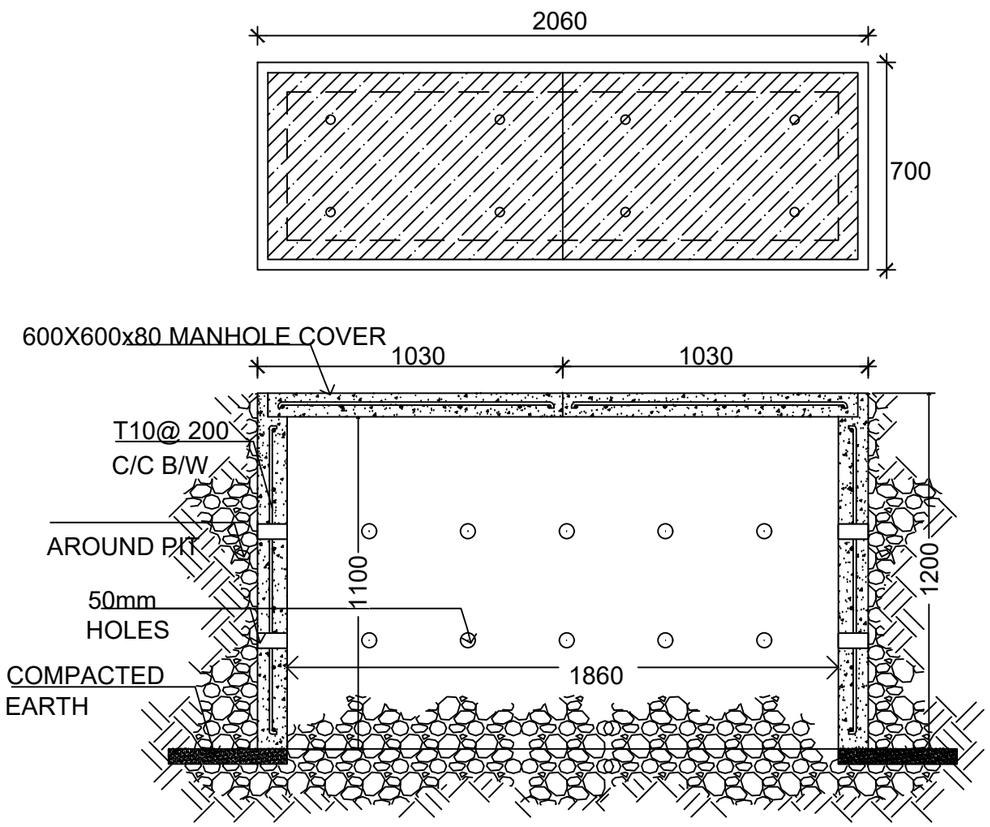

CONCRETE SOAK PIT/WELL
SECTION DETAIL

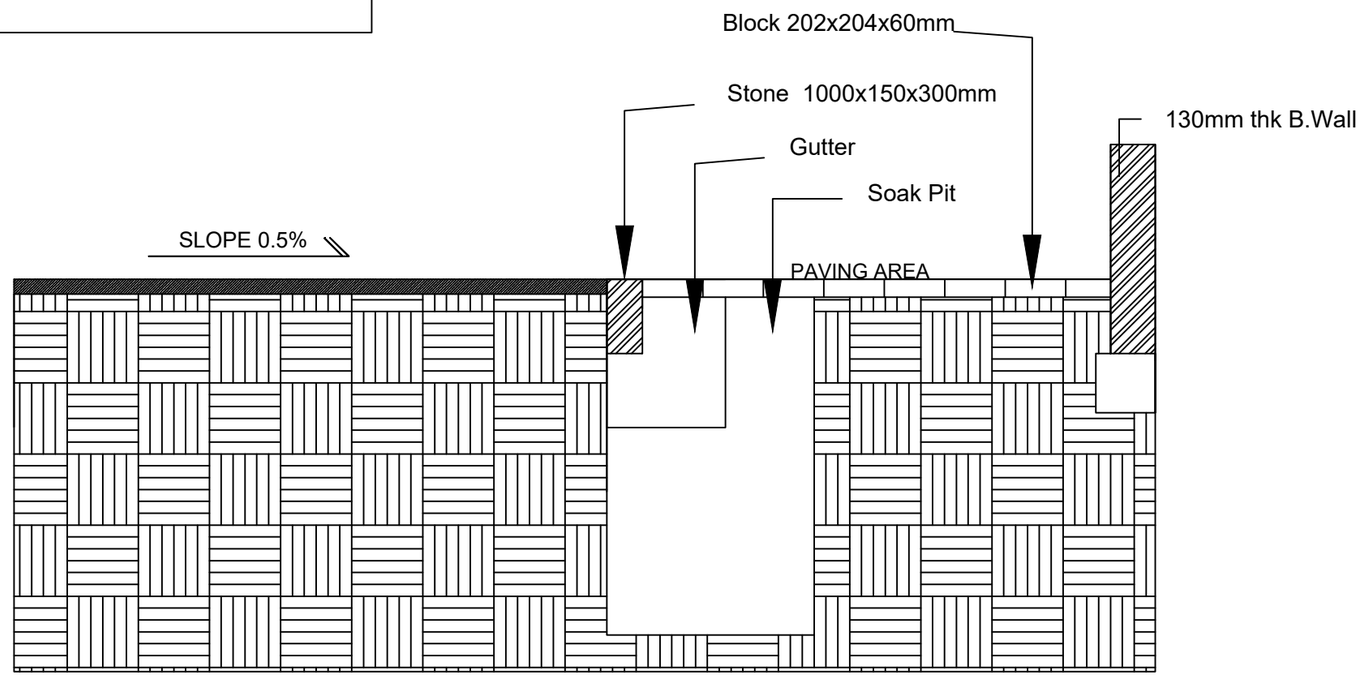

CURB STONE AND PAVING AREA
SECTION DETAIL