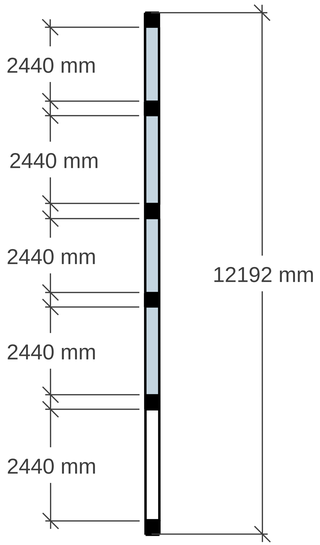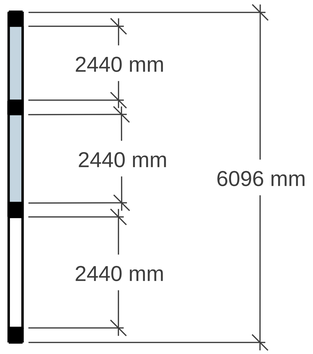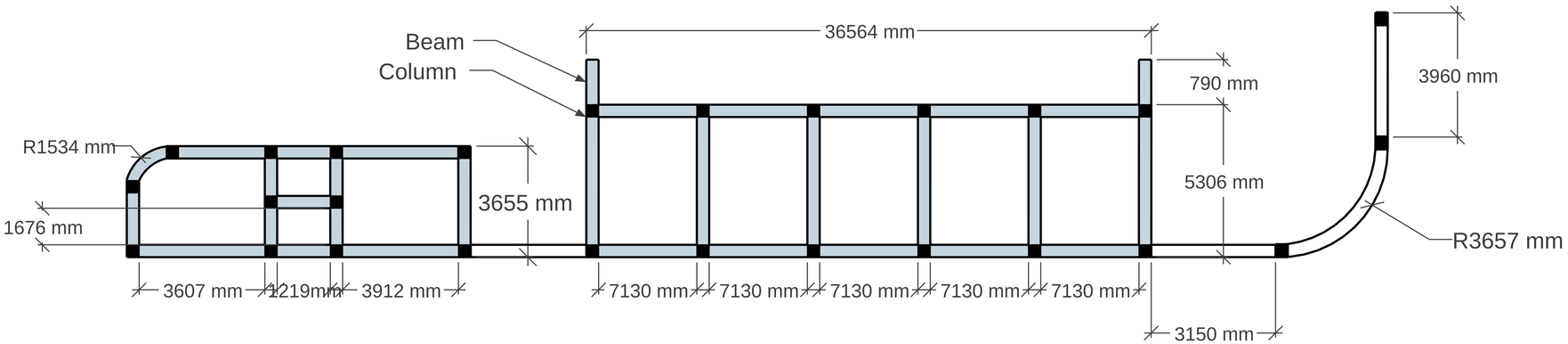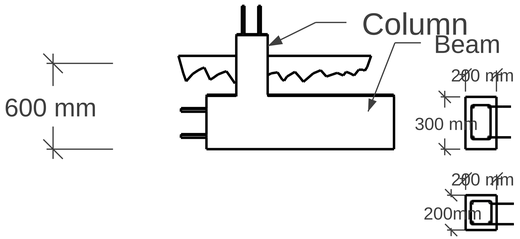FOUNDATION & COLUMN PLAN