DOORS AND WINDOWS

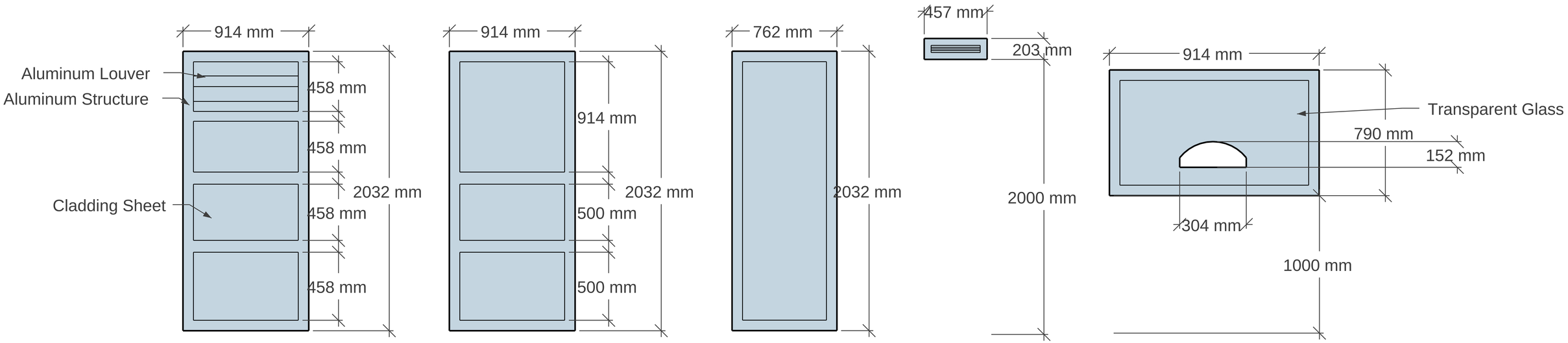

D1
Aluminum

D2
Aluminum

D3
Aluminum

V1
Aluminum

W1
Aluminum