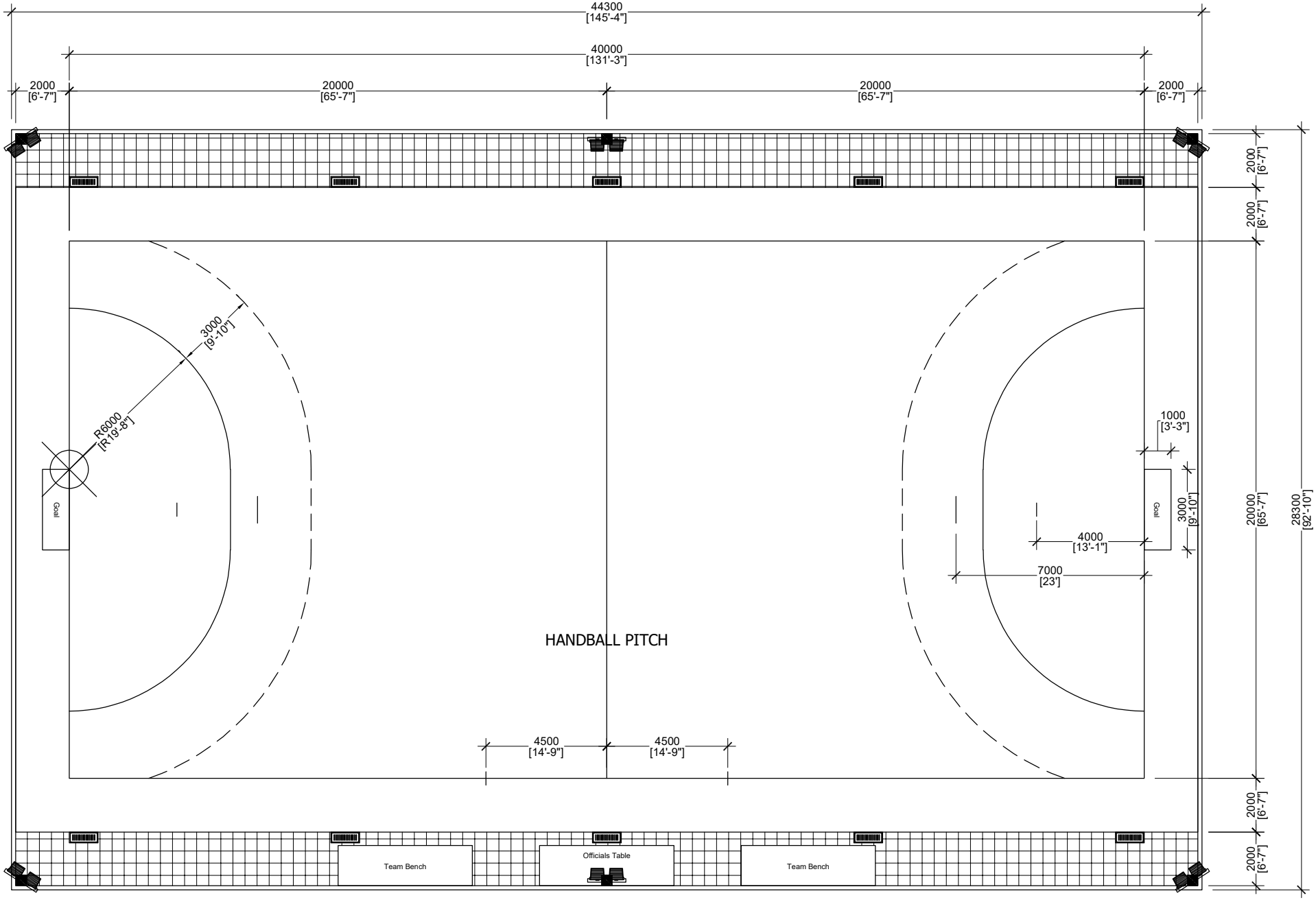
44300
[145'-4"]
40000
[131'-3"]
2000
[6'-7"]
20000
[65'-7"]
20000
[65'-7"]
2000
[6'-7"]
3000
[9'-10"]
R6000
[R19'-8"]
Goal
1000
[3'-3"]
Goal
3000
[9'-10"]
4000
[13'-1"]
7000
[23']
HANDBALL PITCH
4500
[14'-9"]
4500
[14'-9"]
2000
[6'-7"]
2000
[6'-7"]
20000
[65'-7"]
28300
[92'-10"]
2000
[6'-7"]
2000
[6'-7"]
Team Bench
Officials Table
Team Bench

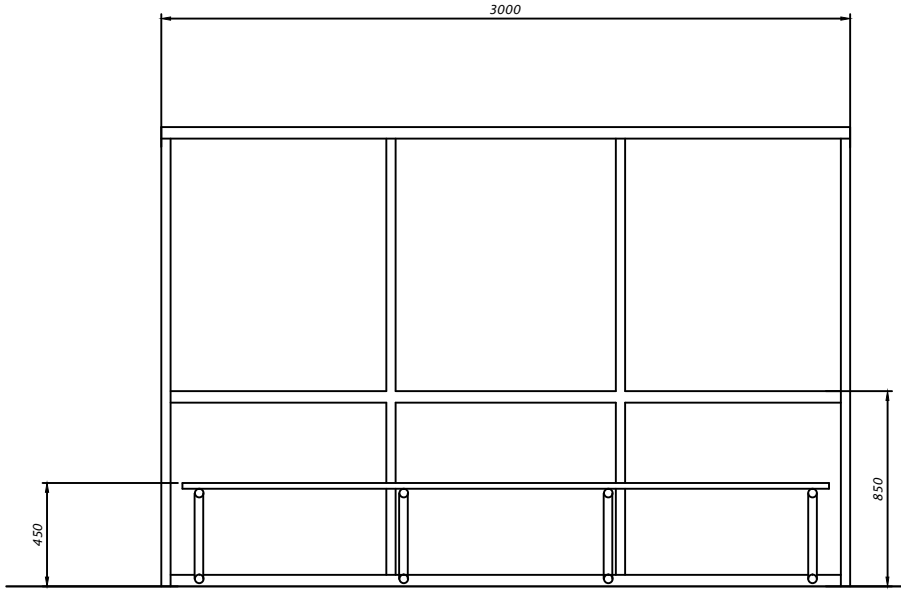

FRONT VIEW

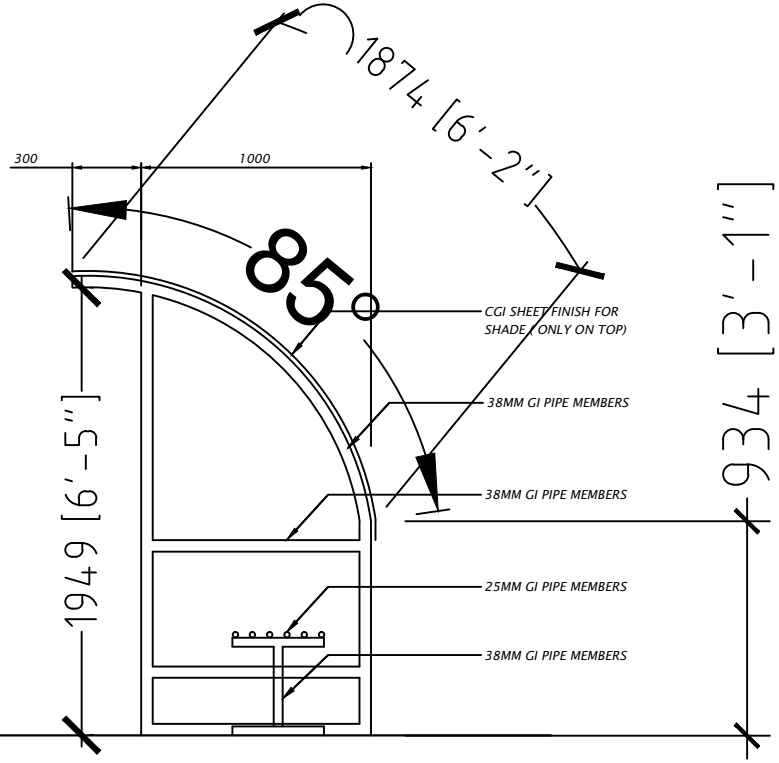

SIDE VIEW

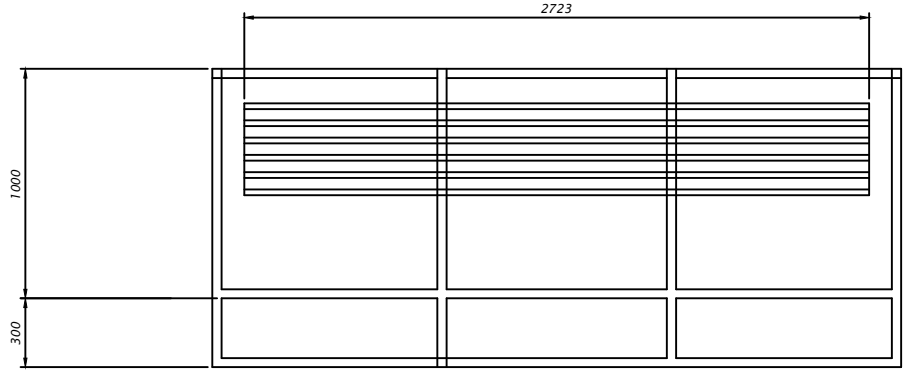

TOP VIEW

DETAIL-GI BENCH

Scale - 1:30

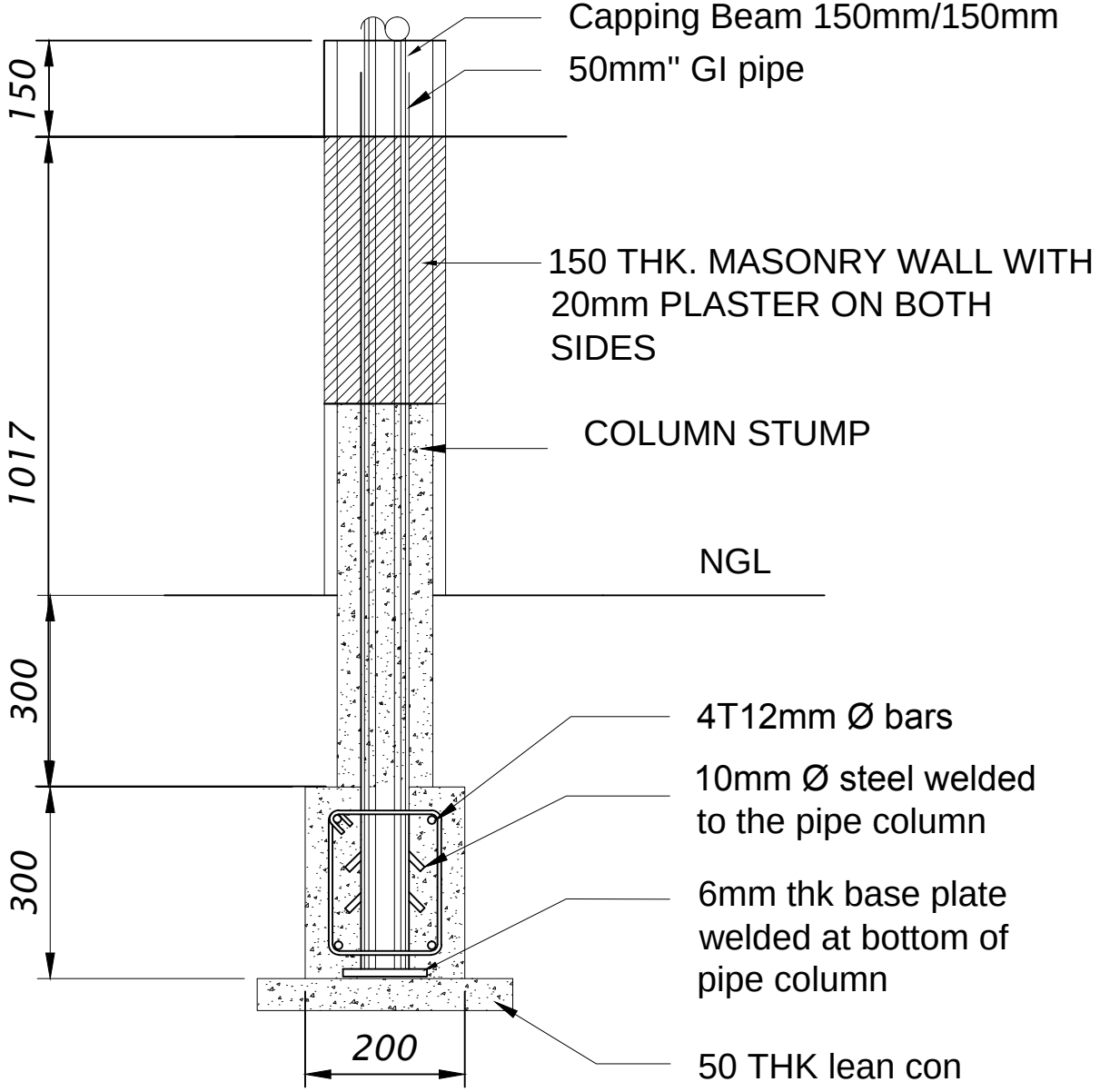

DETAL- COLUMN STUMP

Scale - 1:20

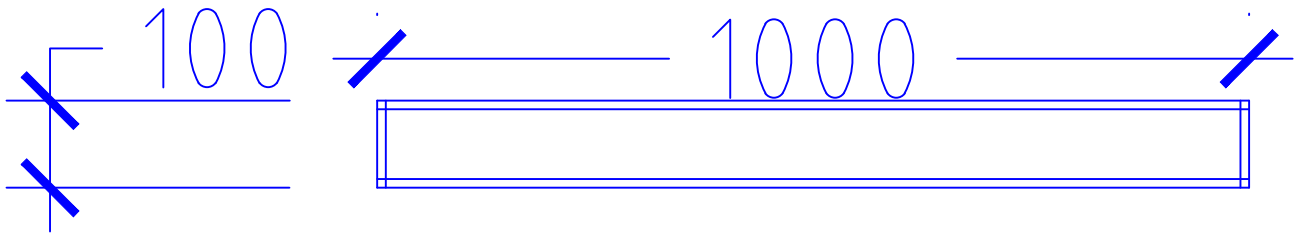

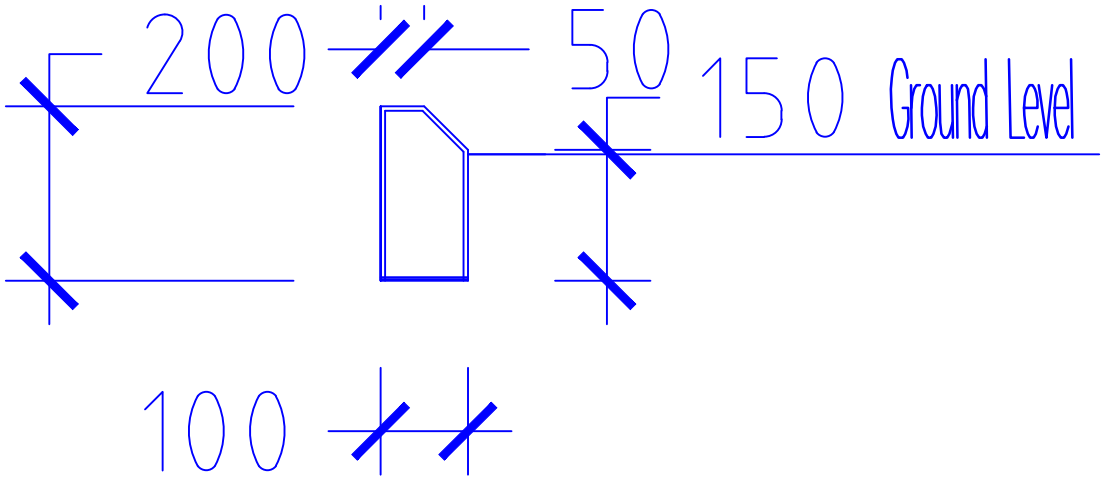

Curbe Stone Details

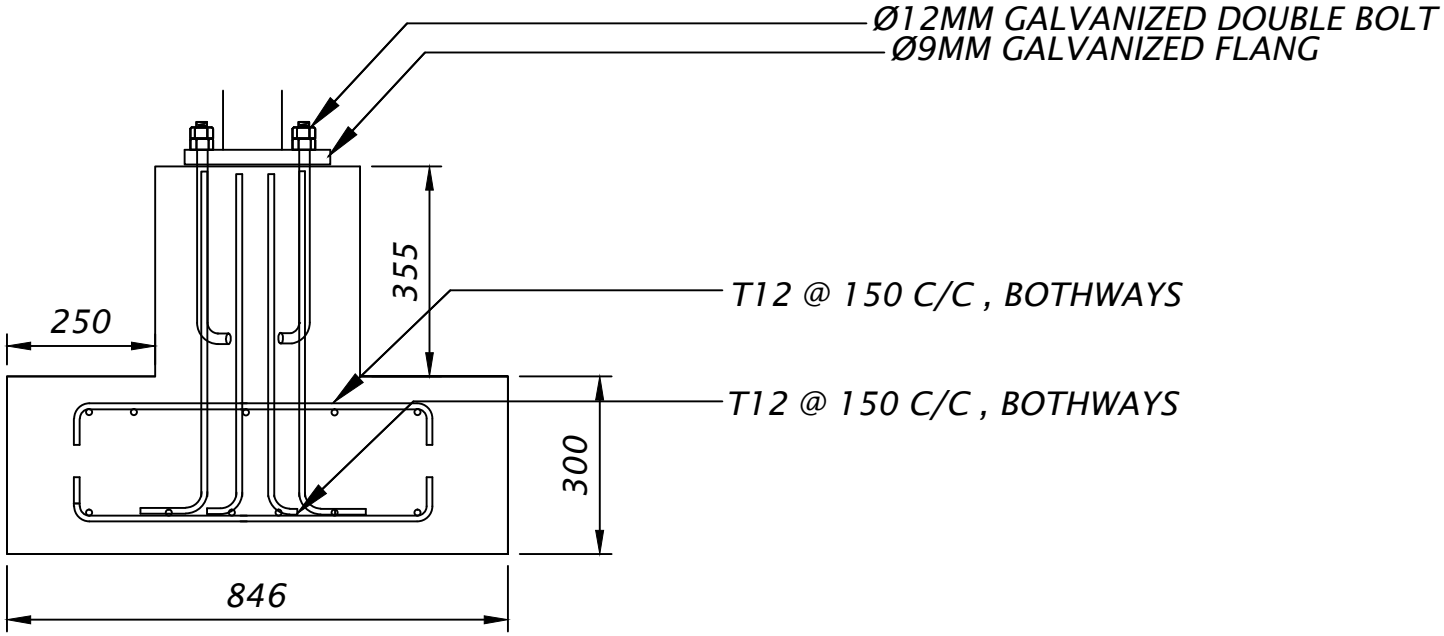

DETAIL - LIGHT POST

SCALE 1:15

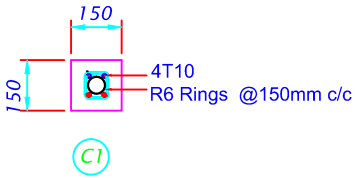

DETAIL-COLUMNS

Scale - 1:20

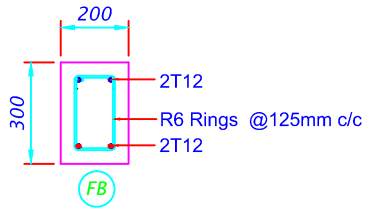

DETAIL-FOUNDATION BEAM

Scale - 1:20

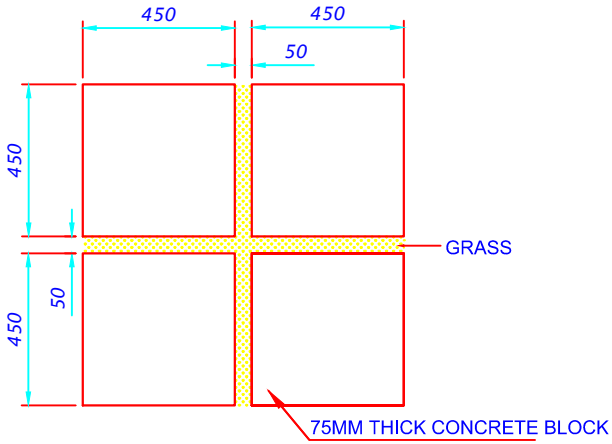

DETAIL-PAVING BLOCKS

Scale - 1:20

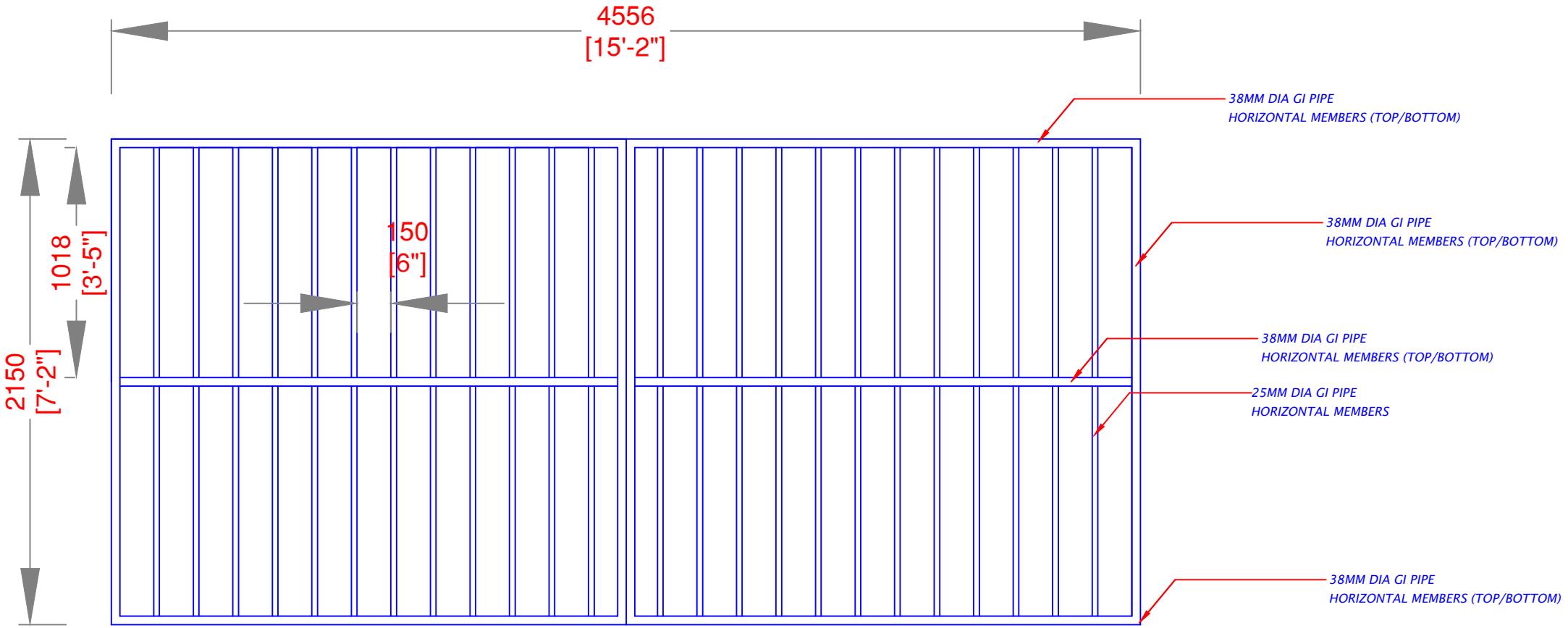

GATE DETAIL

Scale - 1:25

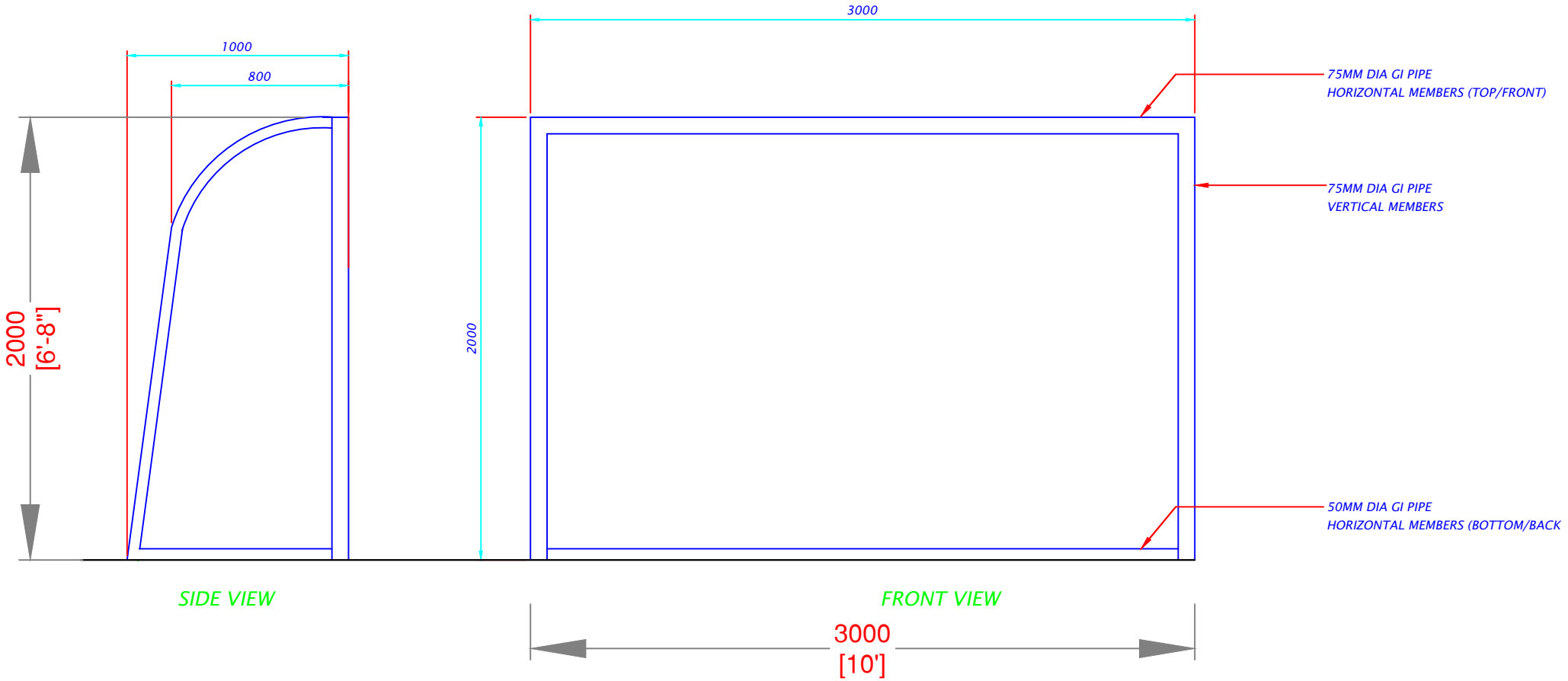

DETAL-GOAL POST

Scale - 1:20

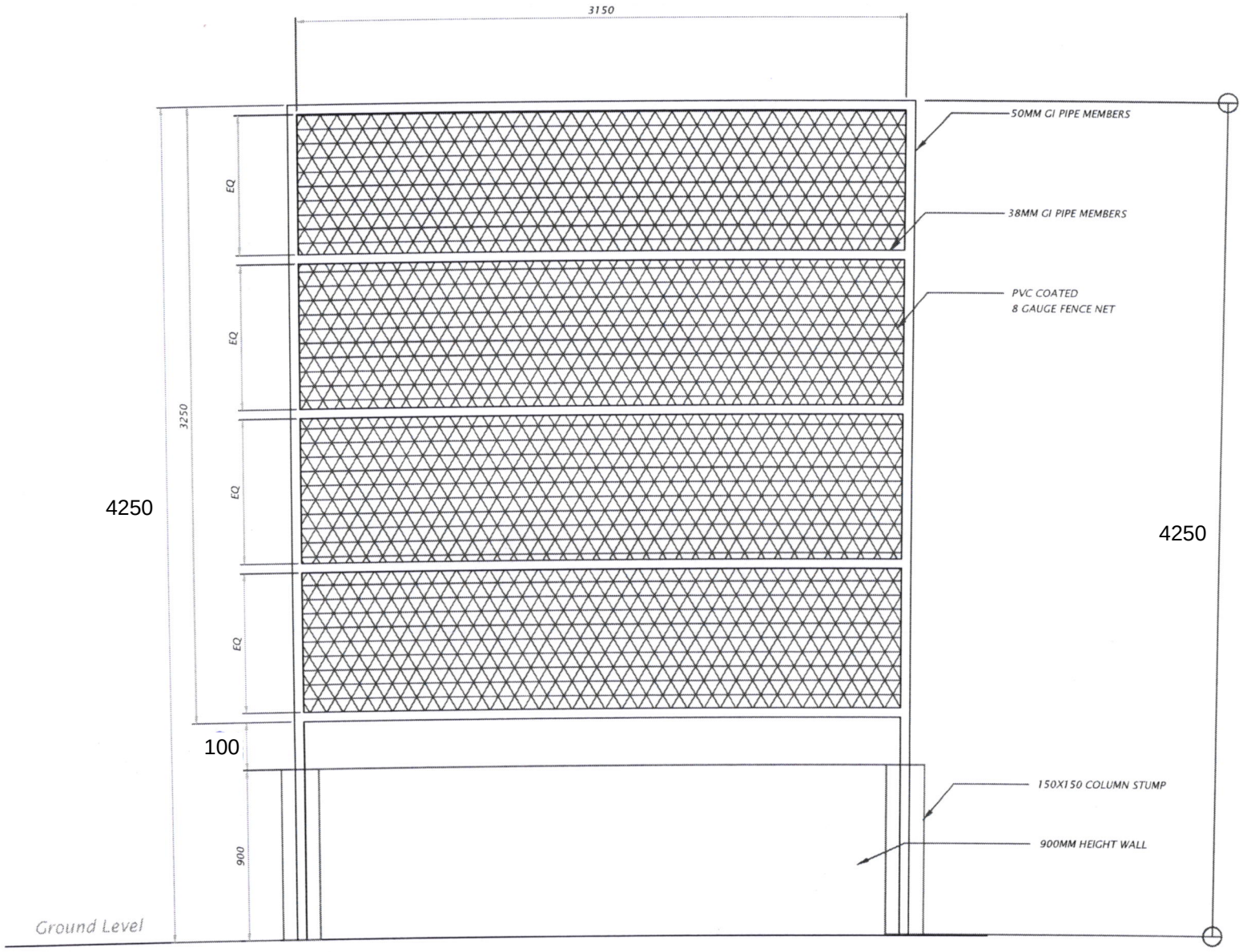

DETAIL-PVC FENCE

Scale - 1:30

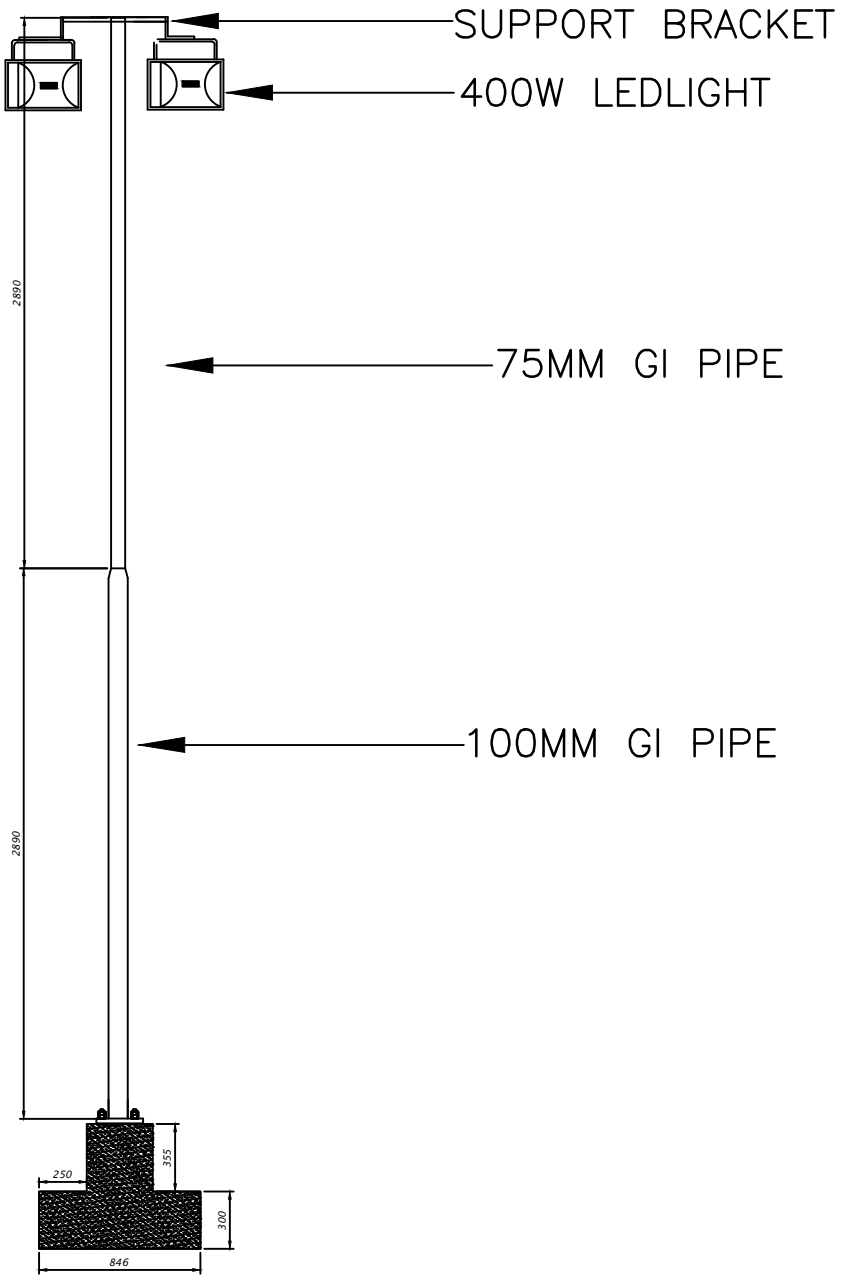

DETAL-LIGHT POST

Scale - 1:30

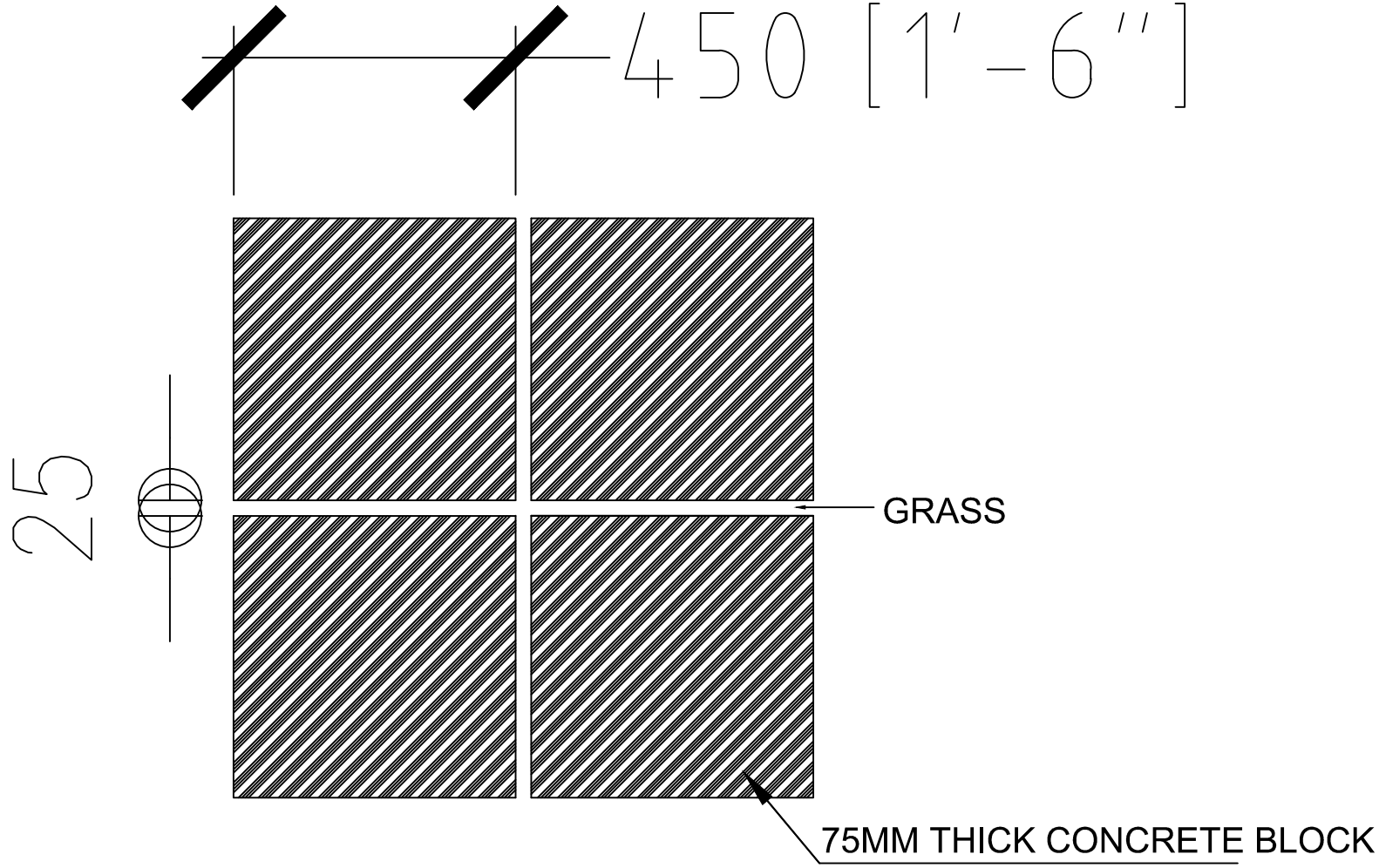

DETAIL-PAVING BLOCKS

Scale - 1:20

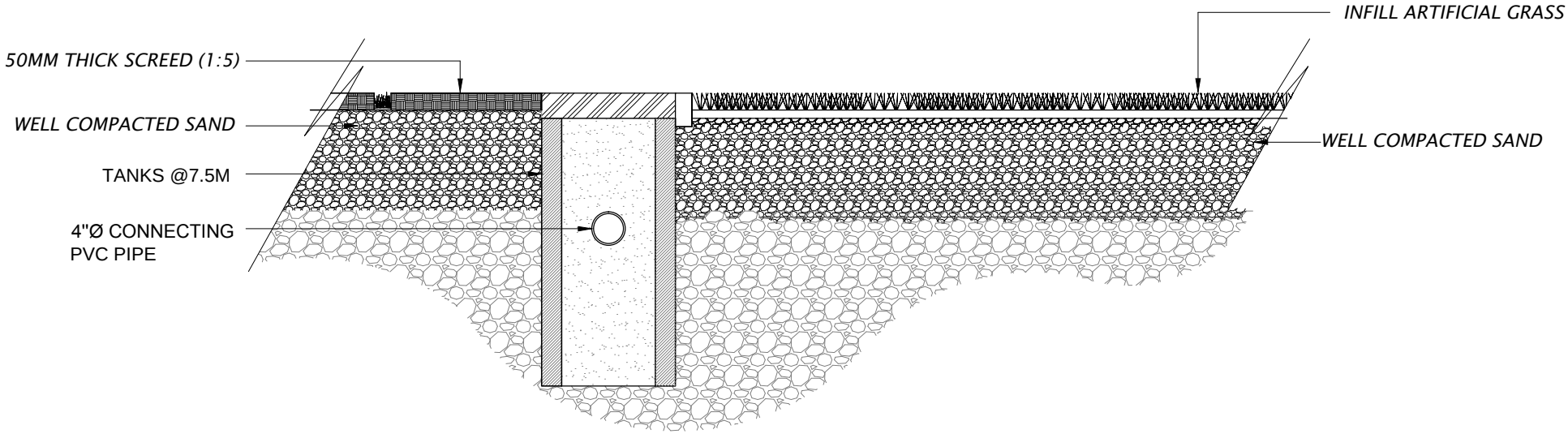

DETAILS- OUTDOOR PITCH

Scale 1:20

SETT-T TECHNICAL DATA SHEET

Settlement Tank

MRDC's engineering quality cement concrete products (MRDC Blocks) are durable, high strength bricks, specially manufactured to cope with exposure to abrasive conditions.

This can be used to collect water from gutter line.

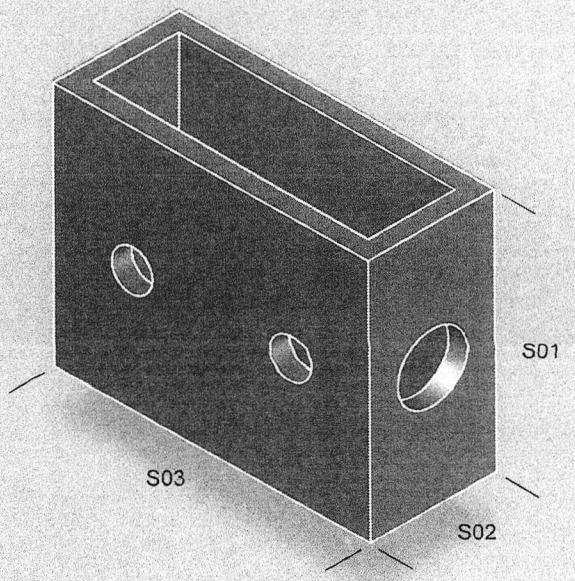

Settlement Tank

S01 : 800mm
S02 : 400mm
S03 : 1000mm

Settlement Tank Specification

Form	Solid PCC settlement tank
Appearance	Standard gray colour – untreated surface
Size	1000mm x 400mm x 800mm and 60mm thickness
Composition	OPC + coral sand + coral stone
Density	Average 2174.9kg/m3
Dry Weight	330kg approximately
Strength	Average 13.6N/mm2
Surface treatment	Untreated
Area coverage	N/A
Presentation	Pellet containing 5 Nos
Pack Weight	1665kg approximately including pellet
Approx Pack Dimension	1.0m x 1.0m x 1.0m height approximately

GUT-CVR TECHNICAL DATA SHEET

RCC Settlement Tank Cover

MRDC's engineering quality cement concrete products (MRDC Blocks) are durable, high strength bricks, specially manufactured to cope with exposure to abrasive conditions.
This can be used in the gutter line to cover the gutter line.

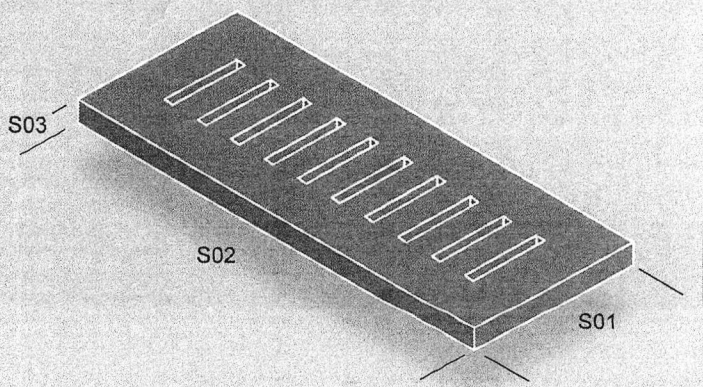

■ RCC Settlement Tank Cover

S01 : 400mm
S02 : 1000mm
S03 : 80mm

Settlement Tank Cover Specification

Form	RCC grating gutter cover
Appearance	Standard gray colour – untreated surface
Size	1000mm x400mm x 500mm and 80mm thickness
Composition	OPC + River sand + Aggregates
Density	Average 2567.6kg/m3
Dry Weight	90kg approximately
Strength	Average 19.0N/mm2
Surface treatment	Untreated
Area coverage	N/A
Presentation	Pellet containing 30 Nos
Pack Weight	2715kg approximately including pellet
Approx Pack Dimension	1.0m x 1.0m x 1.0m height approximately

Handball Goal post details

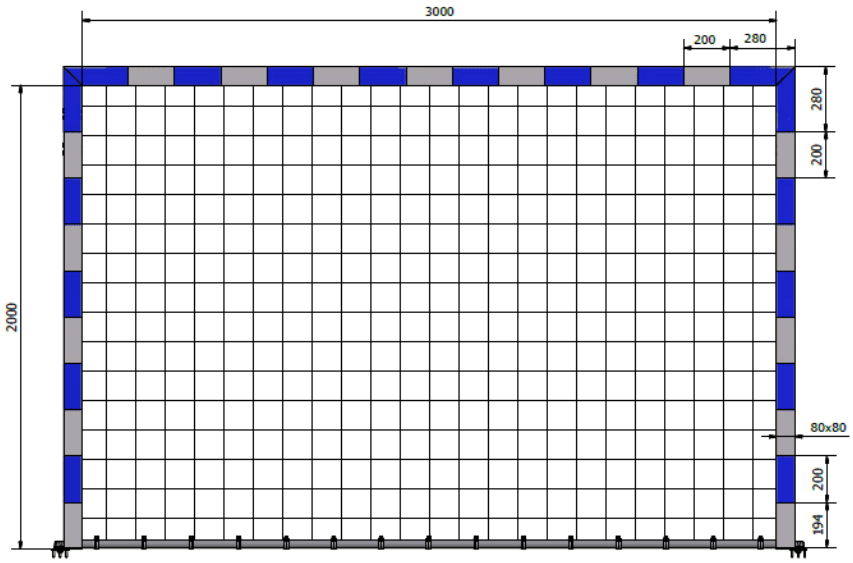

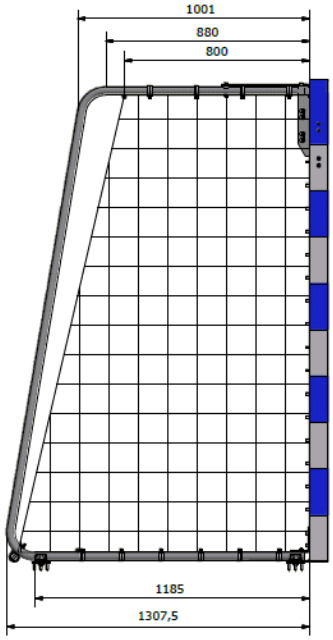

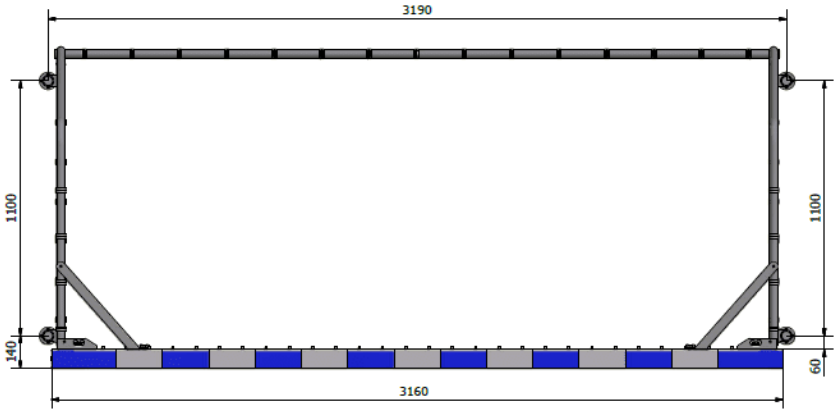



handball courts

