FRONT ELEVATION

SCALE: 1 : 50

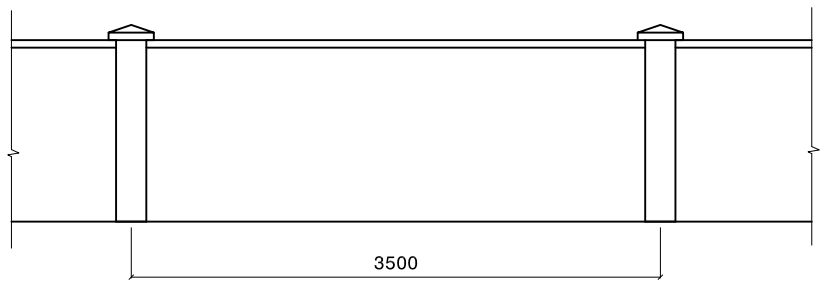

CROSS SECTION X-X

SCALE: 1 : 50

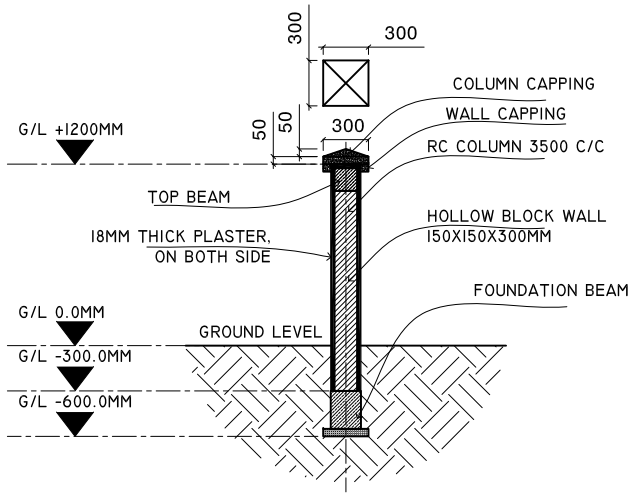

DETAILS R/C

SCALE: 1 : 25

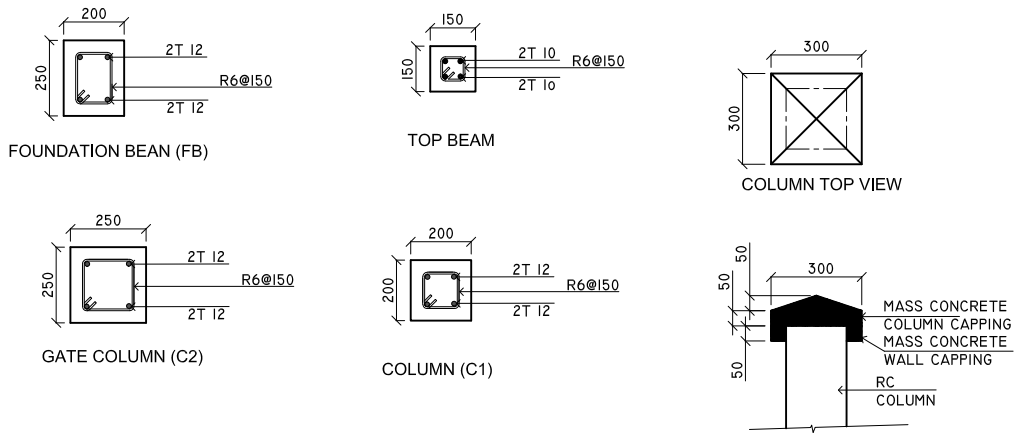

MINIMUM 50MM COVER BELOW GROUND LEVEL	ALL BAR BENDING & OVERLAPS AS PER ACTUAL BS STANDARD.
MINIMUN 30MM COVER ABOVE GROUND LEVEL	

NOTE:
LINTEL BEAMS TO BE LAID ABOVE AND BELOW ALL WINDOWS AND ALL DOORS.

SHEET CONTENTS :

REVISION NOTES:

PROJECT:
CONSTRUCTION OF BOUNDARY WALL

CLIENT:
MINISTRY OF HEALTH

LOCATION:
MULTIPLE ISLANDS

CONTENTS: *AS GIVEN*

PROJECT MANAGER:
DESIGNER: *ARIZ*
CIV/STR. ENGINEER:
SURVEYED BY: -
DRAWN BY: *ARIZ*
CHECKED BY:
DATE : *DEC 2020*
SHEET NO. : /

ADMIN DIVISON
Ministry of Health
Roshanee Building
Sosun Magu'
Tel: 332 8887, Fax: 3328889

SITE PLAN FOR ADDITIONAL BOUNDARY WALL
K. KAASHIDHOO ISLAND

SCALE: 1 : 200

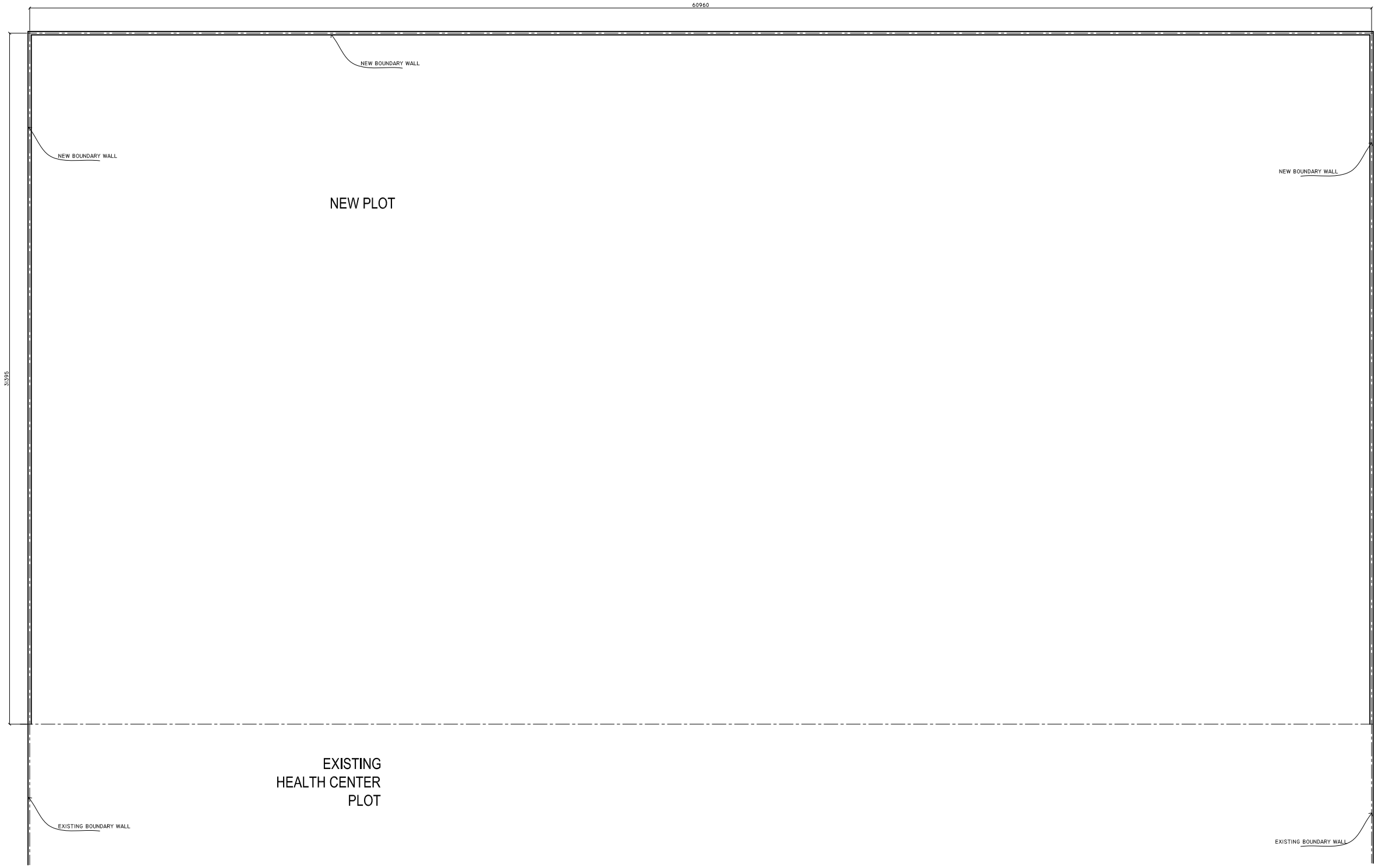

SHEET CONTENTS :

REVISION NOTES:

PROJECT:

CONSTRUCTION OF BOUNDARY WALL

CLIENT:

MINISTRY OF HEALTH

LOCATION:

MULTIPLE ISLANDS

CONTENTS: *AS GIVEN*

PROJECT MANAGER:

DESIGNER: *ARIZ*

CIV/STR. ENGINEER:

SURVEYED BY: -

DRAWN BY: *ARIZ*

CHECKED BY:

DATE : *DEC 2020*

SHEET NO. : /

ADMIN DIVISON
Ministry of Health
Roshanee Building
Sosun Magu'
Tel: 332 8887, Fax: 3328889