ފެތިރުއެއްޓު ންބިއުން ކައުންސިލުގެ ރިވެލާ
ފެތިރުއެއްޓު ންބިއުން،
ދިވެހިރާއްޖެ.

ދަންބިއާ ދިވެހިރާއްޖެ ބިން ހިންގުން ފެތިރު ކونسިލުން ބަންދުކުރުން ބަންދުކުރެވުން

(2 ވަނަ ބަދަލުން ކުރާ ބިއްދެއް)

ހ. ންބިއުން ދަންބިއާ ދިވެހިރާއްޖެ ބިން ހިންގުން ބިން ހިންގުން ބިން ބިން ބިން
ބަންދުކުރުން ބަންދުކުރުން ،ކونسިލުން ،ބަންދުކުރުން ،ބަންދުކުރުން ،ބަންދ

31 ދެން 2022

بسم الله الرحمن الرحيم

ދިވެހިރާජ̊ ން̊ ،ދ̊ ،ﷺ ،ﷺ ،ﷺ

ބެހުން ހުންނަން ފަންނުވާ ތަން ތަކުން

ހިސާބުން 1: ބެހުން ހަދާ ބަންދުކުރާ ތަން

a. ބަންދުކުރުން

ތިން ބަސްދާ ކުރިން ދިވެހިރާއްޖެ ކުރިން ބާއްވާފައިވާ (ތަން.ބަންދ.ބ.ބ) ގެ ދަށުން ހ. ންނާ ބަންދުކުރުން ފެށިގެން ދަންނަވާ ފަދައިން ބަންދުކުރުން ކުރިއަށް ގެންދިއުން 2010 ވަނަ ބަންދު ހަވާދުން ފެށިގެން 12 ބަންދު ވަކިން ތިން ދަންނަވާ ބަންދު ދަންނަވާ ކުރިން ބަންދުކުރުން ކުރެވިފައި ހުންނެވެ.

ންނާ ބަންދުގައި ދަންނަވާ ބަންދުން ބަންދުކުރުން ބަންދުވާ ބަންދުގެ ދުންދަވި ބަންދުތަކުން ހިންދަން 120 ބާވަން ބ ހިންގެވެ.

ބަންދުގައި ހިންދާ ބަންދު ،ބަންދ ،ބ ،ބ ،ބ ،ބ ،ބ ،ބ ،ب ،ب ،ب

ހުންނަން ؤންސިއްކަން ކަން ؤކުން ؤންނަ ؤންސؤ ؤންؤ ؤ ؤ

ފެތުރެންކަން ހުރެފައި ހުންނަ ؛ ؛ ؛

b. ހާލު ބަދަލުވުން

ބަލިން ދިރުމަކަށް ބޭނުންވާ ބޭނުންކުރާ ގޮތް، ބިން ތިންބިން ބަދަލުކުރުން ؛ ؛ ؛

ދެން ބަންދުކުރުން ބަދަލުކުރަން ބާއްވަންވާނީ، ބެލެހެއްޓުން، ބަދަލުކުރުން ހިންގުން، ބަދަލުކުރުން ހިންގުން ހިންގުމުން ހިންގުން ؛ ؛ ؛

c. ބީއެންޕީ ސްކީމަށް ބަދަލުކުރުން ފަރުވާ

- ދިވެހި ވެލިން ކުރެވޭ ބަދަލުތަކުން ފަރުވާގެ ވެރިކަން ދިވެހިރާއްޖެން ބަދަލުވާން ދިވެއެވެ.

d. ބީ ކެޓެގަރީން ހިންނަން ބޭނުންކުރާ ތަން ބަދަލުކުރުން

- ބީ ކެޓެގަރީން ހިންނަން ބޭނުންކުރާ ކުރިން ބުރާ ބުރަން ދިވެ ކުރިން ބީ ހިންނަން ބޭނުންކުރާ ފަރާތްތަކުން ބުރަ ބުރަ ބަދަލުކުރަން ބޭނުންވާ. ބަދަލުކުރާ ބުރަ ބުރަ ބަދަލުވާން ބާއްވާ ކުރިން ބުރަ ބުރަ ބަދަލުކުރާ ކުރިން ބަދަލުކުރާ ބަދަލުތަކުން ބުރަ ބުރަ ބަދަލުވާ ކުރިން ބަދަލުކުރާ ބަދަލުތަކުން ބުރަ ބުރަ ބަދަލުވާ ކުރިން ބަދަލުކުރާ ބަދަލުތަކުން ބުރަ ބުރަ ބަދަލުވާ ކުރިން ބަދަލުކުރާ ބަދަލުތަކުން ބުރަ ބުރަ ބަދަލުވާ ކުރިން ބަދަލުކުރާ ބަދަލުތަކުން ބުރަ ބުރަ ބަދަލުވާ ކުރިން ބަދަ)

**e. ބީ ،ބ،ބ ،ؤ،ؤ ،ؤ،ؤ ،ؤ،ؤ

b. ބެލެންސްކުރުން ހުންނަންވާ ބަންދުކުރުން ތިންބަންދުކުރުން

ތަރައްގީ ކައުންސިލުން ދިވެ ހުންނަންވާ ބަންދުކުރުން ތިންބަންދުކުރުން ؛ންތަ ،ތަރައްގީ ،ބަންދުކުރުން ،ؤ ،ؤ ،ؤ

- ބެހެއްކުރެވިފައި ހުންނަންވާ ހަދިޔާ: 5،000 (ފަސްހާސް) ރުފިޔާ
- ބިރަން ކުރެއްވުމުން ކުއްލިން ތެރެއިން ބަދަލު ކުރެވިދާނެ ބަސްވާ ބަންދުވުން 7 ދުވަހުގެ ތެރެއަށް ބިރަން ކުރެއްވި ފަރާތަކުން ބެހެއްކުރެވިފައި ހުންނަންވާނެއެވެ.
- ބިރަން ހުށަހަޅައިގެން ބިރަން ހުންނެވި ފަރާތަކުން ބިރުވެރިކަން ދައްކަން ބުނެ ފަރާތުން ބިރުވެރިކަން ބިރަން ކުރެއްވިކަން ތާއީދުކުރުމުން ބިރަން ކުރެއްވި ފަރާތަކުން ހުށަހެޅިފައިވާ ބެހެއްކުރެވިފައި ހުންނަންވާނެއެވެ.
- ބިރަން ހުންނަން ބުނެ 500،000 (ފަސްހާސް) ރުފިޔާއަކުން ދަރިވެން ބޭނު�ެއް، ބިރަން ހުންނަން ފަރާތުން ބަދަލުކުރުން ؟؟؟؟ ؟؟؟؟؟؟؟؟؟؟ ؟؟؟؟؟؟؟؟؟؟

ބެލެހެއްން ލިސްޓް

ބެލެހެއްން 1	ބިން ބަދަލުކުރުން
ބެލެހެއްން 2 (a)	ގެންވިދާނެ/ ބަދަލު ކުރެއްވުން ބަލައިގެން
ބެލެހެއްން 2 (b)	ފާސްކުރެވިފައިން ކުރެއްވުން ބަލައިގެން
ބެލެހެއްން 3	ބެލެ.ފާ. ހ ހ ، ، ،

ބެހެއްކުން 1: ބިން ބިލާކުރުން

a. ހުންނަން ބޭނުންވާ ބިން ބަދަލުކުރުން ފެތިއުރުން ބިން ބާއްވައިދިން ބިން ބިލާ ބިން ބަދަލުކުރުން.

ބަދަލުކުރާ ބަންދު ތަރުތީब	ތަފْسِيل	ބިންވަރ
ބިމަށް ބަދަލުވެދާނެ	ދިވެހިން ކުރިން ބިންވެރި ވިދާން ބަދަލުވާ ފެތިއުރުން ބިން ބާއްވައިދިން. ބިންތައް ފެތިއުރުން ބިން ބާއްވައިގެން ބިން ބިލާ ބިން ބަދަલުކުރުން. ○ ކުރިން ދުވަން 2 އަހަރު ދުވަން ބިންކަން ބަދަلުވާ ބިންތައް ބިމަށް ބިން ބިން ބިން ބިލާ ބިން ބަދަلުކުރުން. (ސަރْވިސްތަކުން ބިން ބަދަلުކުރުން.) ތަން ○ ބިމަށްކުރާ، ބިން ބިލާ ބިން ބަދަلުކުރުން ބަދަلުކުރުން ބަދަلُ ކُرُمُ ؤُرُمُ ؤُرُمُ ؤ

Form of Tender Security (Bank Guarantee)

The Issuing Bank shall fill in this Bank Guarantee Form in accordance with the instructions indicated.
…… {Bank's Name, and Address of Issuing Branch or Office}
Beneficiary: {Name and Address of Employer}
Date:
TENDER GUARANTEE No.: _____
We have been informed that _____ {name of the Tenderer} (hereinafter called "the Tenderer") has submitted to you its Tender dated _____ (hereinafter called "the Tender") for the execution of _____ {name of contract} under Invitation for Tenders No. _____ ("the IFB").
Furthermore, we understand that, according to your conditions, Tenders must be supported by a Tender guarantee.
At the request of the Tenderer, we _____ {name of Bank} hereby irrevocably undertake to pay you any sum or sums not exceeding in total an amount of _____ [amount in figures] (_____) [amount in words] upon receipt by us of your first demand in writing accompanied by a written statement stating that the Tenderer is in breach of its obligation(s) under the Tender conditions, because the Tenderer:
(a) has withdrawn its Tender during the period of Tender validity specified by the Tenderer in the Form of Tender; or
(b) having been notified of the acceptance of its Tender by the Employer during the period of Tender validity, (i) fails or refuses to execute the Contract Form, if required, or (ii) fails or refuses to furnish the performance security, in accordance with the ITB.
This guarantee will expire: (a) if the Tenderer is the successful Tenderer, upon our receipt of copies of the contract signed by the Tenderer and the performance security issued to you upon the instruction of the Tenderer; and (b) if the Tenderer is not the successful Tenderer, upon the earlier of (i) our receipt of a copy your notification to the Tenderer of the name of the successful Tenderer; or (ii) {insert date} twenty-eight days after the expiration of the Tenderer's Tender.

Consequently, any demand for payment under this guarantee must be received by us at the office on or before that date.
This guarantee is subject to the Uniform Rules for Demand Guarantees, ICC Publication No. 458

[Signature(s)]

އެޓެچްމަންޓް 2 (b): ފާސްކުރެވުން ހުށަހެޅުން ބަންދުކުރުން

Performance Security

[The issuing bank, as requested by the successful Contractor, shall fill in this form in accordance with the instructions indicated]
Date: [insert date (as day, month, and year)]
Title of the procurement: [Insert general title of the procurement]
Procurement Reference No: [insert reference]
Bank's Branch or Office: [insert complete name of Guarantor]
Beneficiary: [insert complete name of Employer/Procuring Entity]
Performance Guarantee No:
We have been informed that ……. [name of the Contractor], (hereinafter called "the Contractor") has entered into Contract No. . . .. [procurement reference number of the Contract]. dated [insert day and month], [insert year], with you, for the execution of ……. [name of contract and brief description of Works] (hereinafter called "the Contract").
Furthermore, we understand that, according to the conditions of the Contract, a performance guarantee is required.
At the request of the Contractor, we ……. [name of the Bank] hereby irrevocably undertake to pay you any sum or sums not exceeding in total an amount of …… **[name of the currency and amount in figures] 1**…. (. . . . . [amount in words]) such sum being payable in the types and proportions of currencies in which the Contract Price is payable, upon receipt by us of your first demand in writing accompanied by a written statement stating that the Contractor is in breach of its obligation(s) under the Contract, without your needing to prove or to show grounds for your demand or the sum specified therein.
This guarantee shall expire, no later than the …. day of . . . . . , ... **2**, and any demand for payment under it must be received by us at this office on or before that date. The Guarantor agrees to a one-time extension of this guarantee for a period not to exceed …. [six months] [one year], in response to the Employer's written request for such extension, such request to be presented to the Guarantor before the expiry of the guarantee.
This guarantee is subject to the Uniform Rules for Demand Guarantees, ICC Publication No. 458, except that subparagraph (ii) of Sub-article 20(a) is hereby excluded.
. . . . . **[Seal of Bank and Signature(s)]**

Note: -

All italicized text is for guidance on how to prepare this demand guarantee and shall be deleted from the final document.

1 The Guarantor shall insert an amount representing the percentage of the Contract Price specified in the Contract and denominated either in the currency (ies) of the Contract or a freely convertible currency acceptable to the Employer.

2 Insert the date twenty-eight days after the expected completion date. The Employer should note that in the event of an extension of the time for completion of the Contract, the Employer would need to request an extension of this guarantee from the Guarantor. Such request must be in writing and must be made prior to the expiration date established in the guarantee.

ބަންދު ކުރެވިފައިވާ ކުރިން ބޭނުންކުރި ތަرتيب ބަދަލުކުރުން

ބަންދުކުރެވިފައިވާ ކަން ކަންބަސްވުން ކުރުން

ކ. ބ. ؛ ؛ ؛

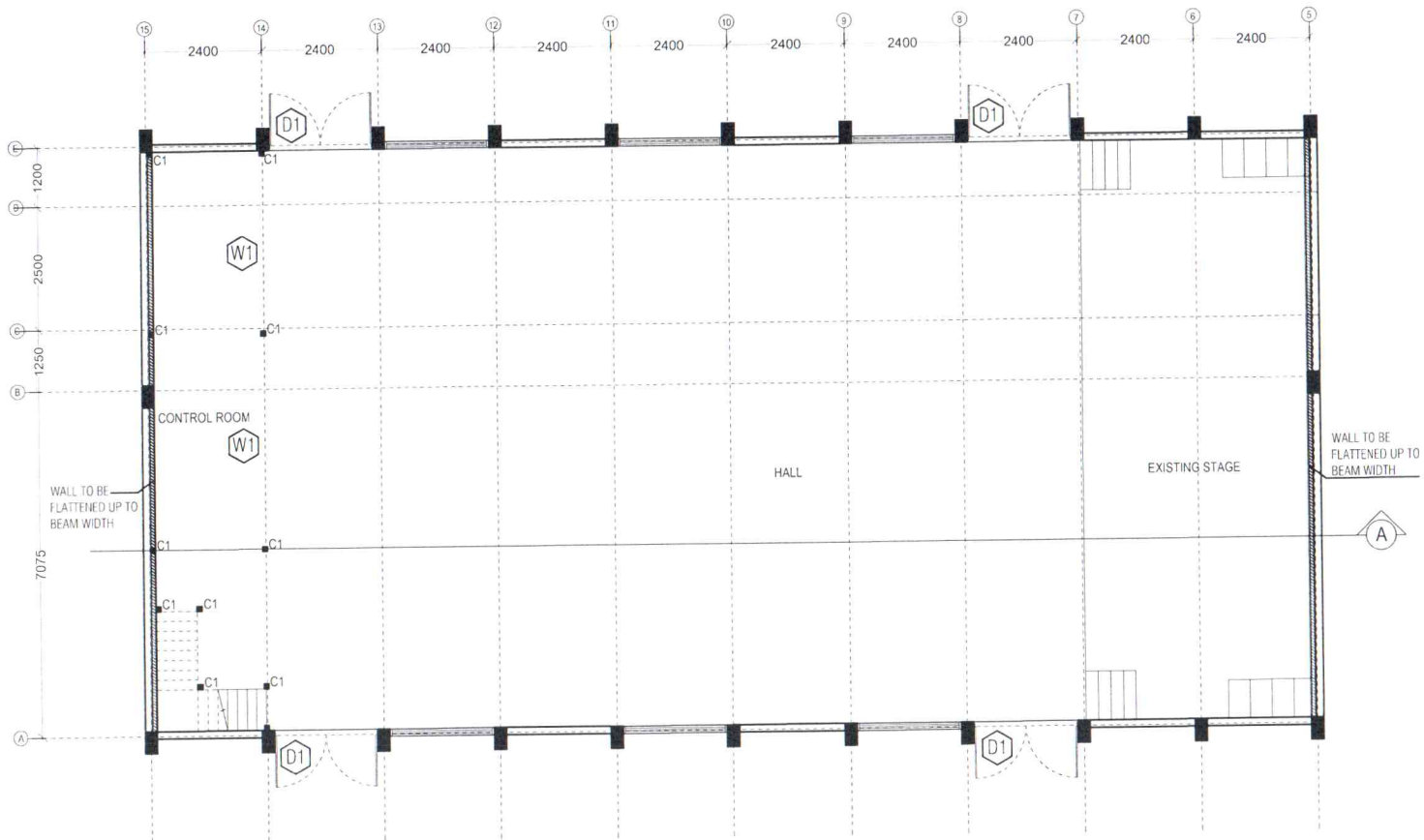

*CHECK ALL MEASUREMENTS ON SITE BEFORE FABRICATION

ڪميٽي ڊائريڪٽر
(ڊيزائنر)

ڊيزائن سپروائزر
(ڊيزائنر)

ڊيزائن برسٽر
ڊائريڪٽر (ڊيزائنر)

ڪميٽي برسٽر
(ڊيزائنر)

مدد ڪرڻ سيڪرٽري
(مدد ڪرڻ)

ڊائريڪٽر جنرل
(جنرل)

GROUND FLOOR PLAN

SCALE 1:150

SECRETARIAT OF TI
NAIFARU
COUNCI

PROJECT:
RENOVATION OF MPB HA

DESIGNED BY:
ISMAIL YAMAAN YOOSUF
ARCHITECT
NAIFARU COUNCIL

CHECKED BY:
ASHHAM MOHAMED
ASSISTANT DIRECTOR
NAIFARU COUNCIL

APPROVED BY:
MOHAMED RASHEED
COUNCIL PRESIDENT
NAIFARU COUNCIL

DATE:
SEPTEMBER 2021

DWG NO:	SHEET NO:
01	01

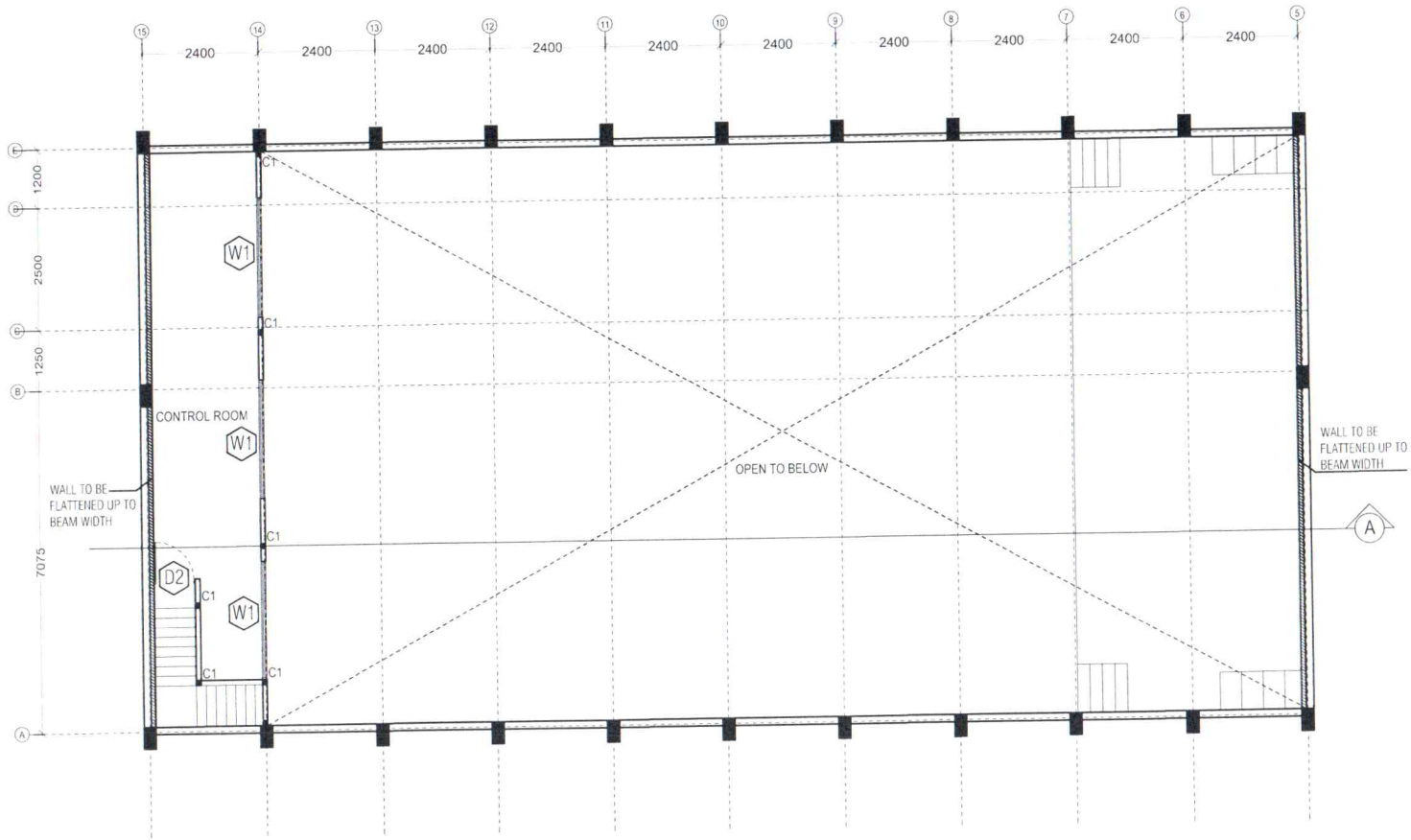

*CHECK ALL MEASUREMENTS ON SITE BEFORE FABRICATION

ڪُلِ ڏُبَرْدَڏُ (ڏُوَهَر) | دَمْدَمْ سُودَ (ڏُوَهَر) | ڊَمِ سُوَهْ بِرِڻ ڏُبَرْدَڏُ (ڏُوَهَر) | هَڪْڪُرالله بَرَسَمْ (ڏُوَهَر) | هَبْدَڏُ سَعِيڊُ (سَرِهْڻَرِسْ) | ڏُبَرْدَڏُ بَرَسُوڊُ (بَرِسْ)

MEZZANINE FLOOR PLAN

SCALE 1:150

SECRETARIAT OF TI
NAIFARU
COUNCII

PROJECT:
RENOVATION OF MPB HA

DESIGNED BY:
ISMAIL YAMAAN YOOSUF
ARCHITECT
NAIFARU COUNCIL

CHECKED BY:
ASHHAM MOHAMED
ASSISTANT DIRECTOR
NAIFARU COUNCIL

APPROVED BY:
MOHAMED RASHEED
COUNCIL PRESIDENT
NAIFARU COUNCIL

DATE:
SEPTEMBER 2021

DWG NO:	SHEET NO:
02	02

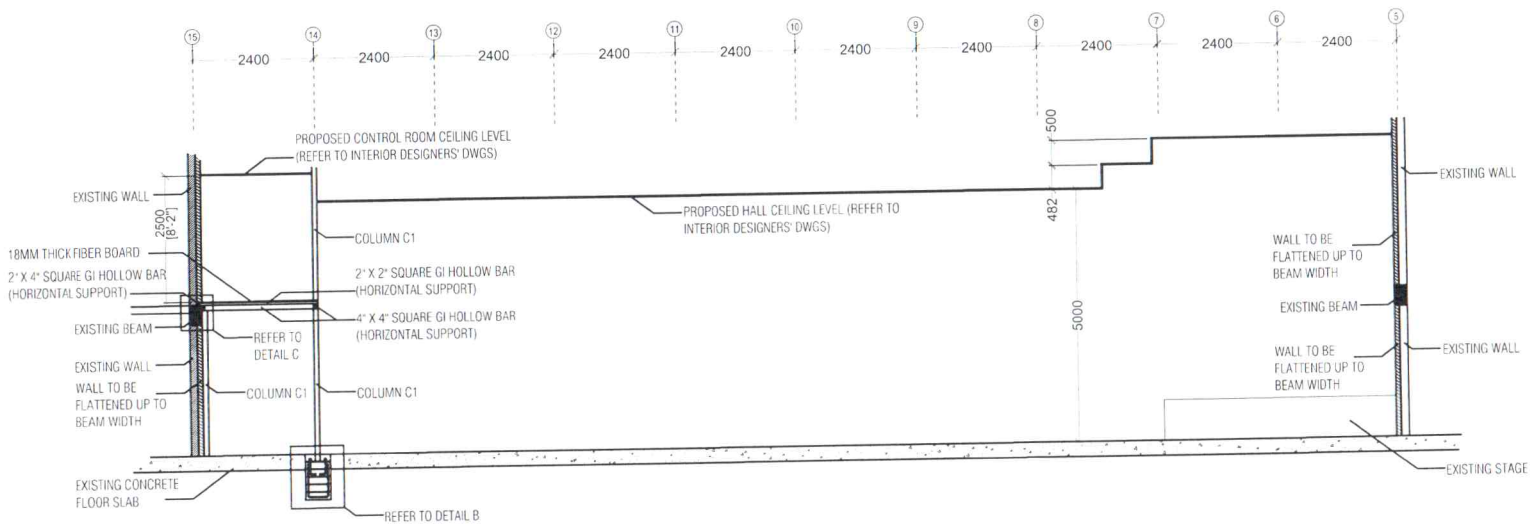

*CHECK ALL MEASUREMENTS ON SITE BEFORE FABRICATION

ڪُوچِ ڏُرُهُڏَرُ
(ڏُوهَه)

ڏَرُهَڏُ ڪُوَرَ
(ڏُوهَه)

ڦَرِ ڪَوَهُ بِرِڻُ
ڏُرُهُڏَرُ (ڏُوهَه)

ڀَرُهُ ڦَرالله بَرَسَمُ
(ڏُوهَه)

ڏُرُهُڏَرُ ڪُوچِ
(ڀَرِهِڏَڀَرِسُ)

ڏُرُهُڏَرُ بَرَسِوِڙ
(ڀَرِسُ)

SECTION A

SCALE 1:150

SECRETARIAT OF TI
NAIFARU
COUNCI

PROJECT:
RENOVATION OF MPB HA

DESIGNED BY:
ISMAIL YAMAAN YOOSUF
ARCHITECT
NAIFARU COUNCIL

CHECKED BY:
ASHHAM MOHAMED
ASSISTANT DIRECTOR
NAIFARU COUNCIL

APPROVED BY:
MOHAMED RASHEED
COUNCIL PRESIDENT
NAIFARU COUNCIL

DATE:
SEPTEMBER 2021

DWG NO:	SHEET NO:
03	03

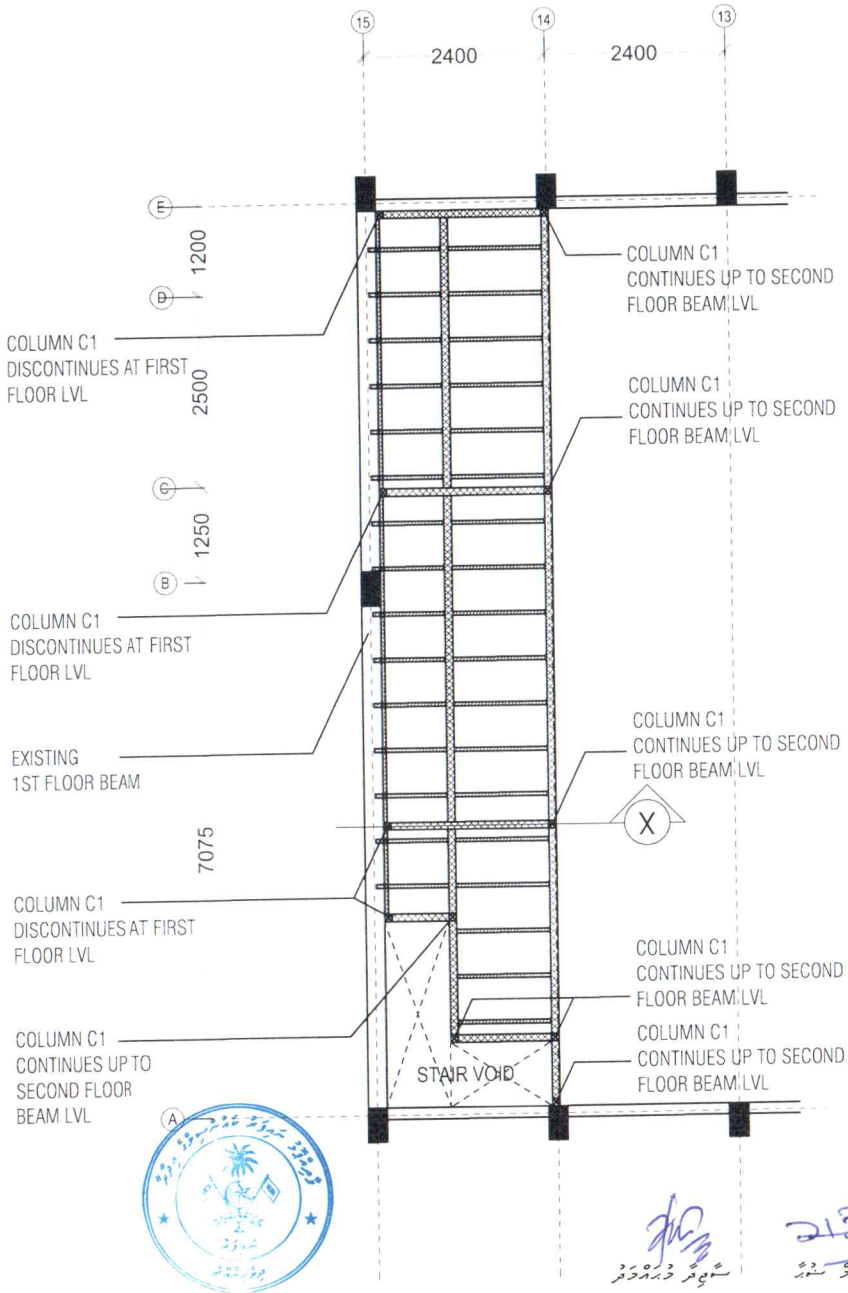

LEGENDS
- 4" X 4" SQUARE GI HOLLOW BAR (HORIZONTAL SUPPORT)
- 2" X 2" SQUARE GI HOLLOW BAR (HORIZONTAL SUPPORT)
- 2" X 4" SQUARE GI HOLLOW BAR (HORIZONTAL SUPPORT)
- 4" X 4" SQUARE GI HOLLOW BAR (VERTICAL SUPPORT)

*CHECK ALL MEASUREMENTS ON SITE BEFORE FABRICATION

ؤرىدىكى ئىسمائىل يامان يوسۇف
(ئارخىتېكت)

ئاشھام محمد سۈلەيمان
(ئۇچۇر)

محمد رەشىد
ئۇرىدىكى ئەزا (ئۇچۇر)

ھەسەنۋاللە ئەلەۋى
(ئۇچۇر)

مەرۋەت سۈھەيل
(مەرىكەزى مەرىيەت)

ئىبراھىم ئەلەۋى
(مەرىيەت)

MEZZANINE FLOOR STRUCTURAL PLAN

SCALE 1:100

SECRETARIAT OF TI
NAIFARU
COUNCI

PROJECT:
RENOVATION OF MPB HA

DESIGNED BY:
ISMAIL YAMAAN YOOSUF
ARCHITECT
NAIFARU COUNCIL

CHECKED BY:
ASHHAM MOHAMED
ASSISTANT DIRECTOR
NAIFARU COUNCIL

APPROVED BY:
MOHAMED RASHEED
COUNCIL PRESIDENT
NAIFARU COUNCIL

DATE:
SEPTEMBER 2021

DWG NO:	SHEET NO:
04	04

SYMBOL	D1	D2	W1
ELEVATION	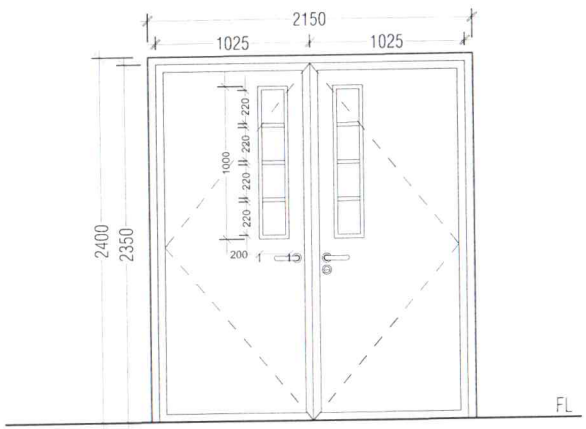	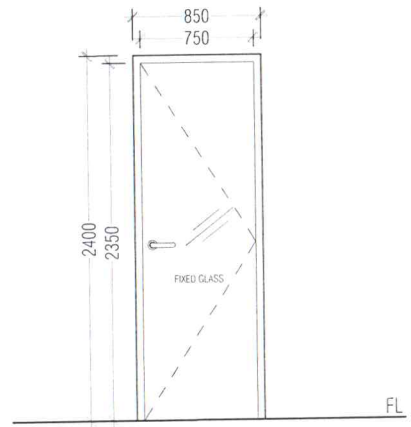	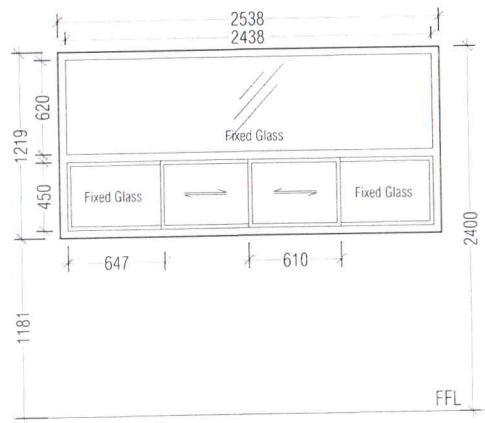
FRAME & PANEL	Fiber Glass Jamb Door and Leaf w/ 6mm thk. Fixed Glass Panels	25 Micro Anodized Natural Aluminium Framed Door w/ 6mm thk. Fixed Glass Panels	25 Micron Anodized Natural Aluminum Sliding Window with Fixed Glass Panel
QUANTITY	04 Nos	01 Nos	03 Nos

CHECK ALL MEASUREMENTS ON SITE BEFORE FABRICATION

ژۯژۯ ،ژۯژۯ ،ژۯژۯ ،ژۯژۯ ،ژۯژۯ ،ژۯژۯ

DOOR AND WINDOW SCHEDULE

SCALE 1:50

SECRETARIAT OF TI
NAIFARU
COUNCII

PROJECT:
RENOVATION OF MPB HA

DESIGNED BY:
ISMAIL YAMAAN YOOSUF
ARCHITECT
NAIFARU COUNCIL

CHECKED BY:
ASHHAM MOHAMED
ASSISTANT DIRECTOR
NAIFARU COUNCIL

APPROVED BY:
MOHAMED RASHEED
COUNCIL PRESIDENT
NAIFARU COUNCIL

DATE:
SEPTEMBER 2021

DWG NO:	SHEET NO:
05	05

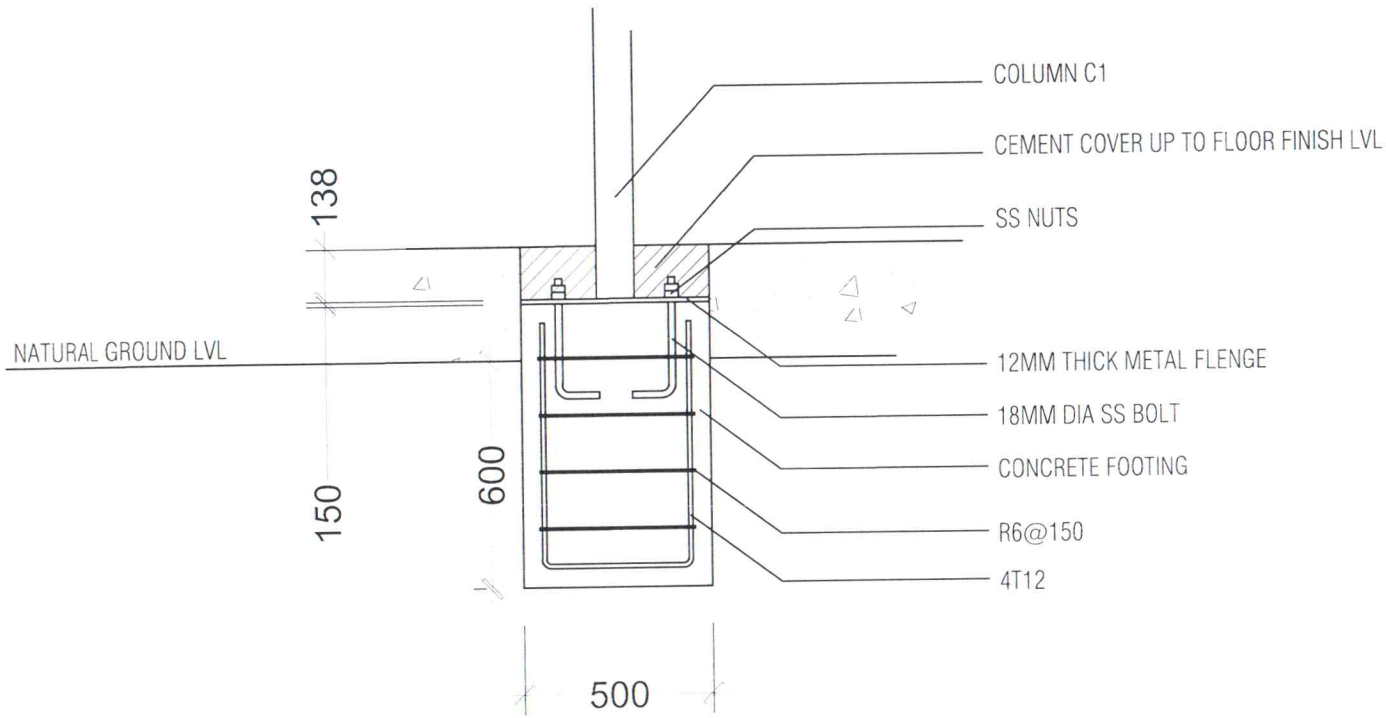

*CHECK ALL MEASUREMENTS ON SITE BEFORE FABRICATION

DETAIL A

SCALE 1:20

SECRETARIAT OF TI
NAIFARU
COUNCI

PROJECT:
RENOVATION OF MPB HA

DESIGNED BY:
ISMAIL YAMAAN YOOSUF
ARCHITECT
NAIFARU COUNCIL

CHECKED BY:
ASHHAM MOHAMED
ASSISTANT DIRECTOR
NAIFARU COUNCIL

APPROVED BY:
MOHAMED RASHEED
COUNCIL PRESIDENT
NAIFARU COUNCIL

DATE:
SEPTEMBER 2021

DWG NO:	SHEET NO:
06	06

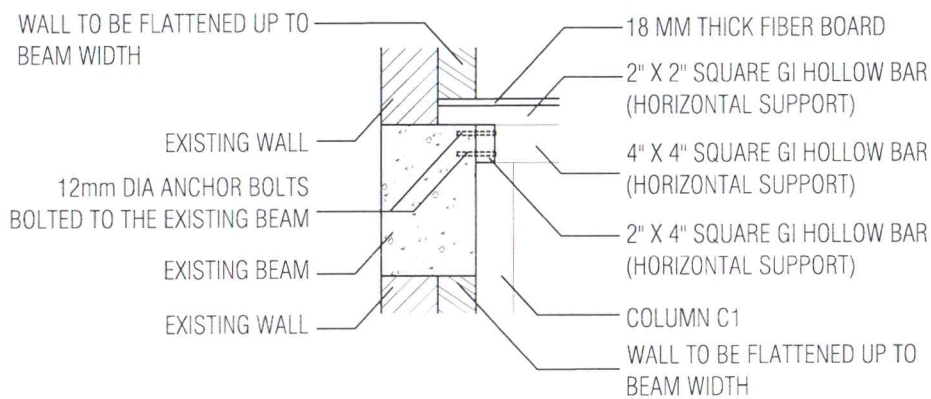

DETAIL B

SCALE 1:20

*CHECK ALL MEASUREMENTS ON SITE BEFORE FABRICATION

SECRETARIAT OF TI
NAIFARU
COUNCI

PROJECT:
RENOVATION OF MPB HA

DESIGNED BY:
ISMAIL YAMAAN YOOSUF
ARCHITECT
NAIFARU COUNCIL

CHECKED BY:
ASHHAM MOHAMED
ASSISTANT DIRECTOR
NAIFARU COUNCIL

APPROVED BY:
MOHAMED RASHEED
COUNCIL PRESIDENT
NAIFARU COUNCIL

DATE:
SEPTEMBER 2021

DWG NO:	SHEET NO:
07	07

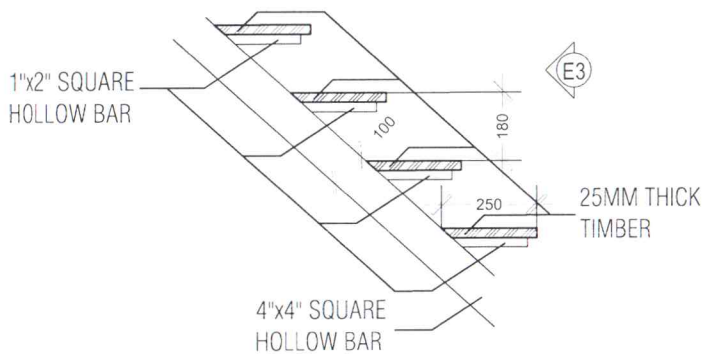

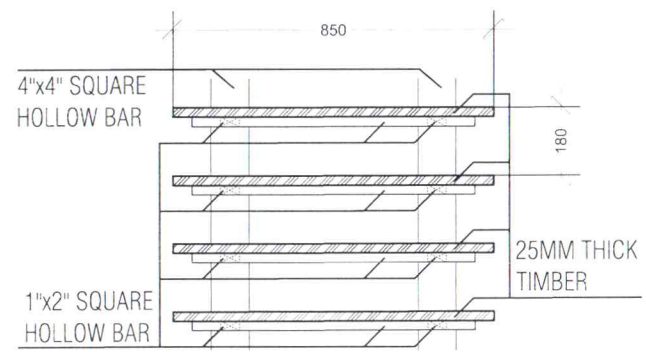

ELEVATION E3

ڪميٽي ڪمرو
ڪميٽي سيڪرٽريٽ
نائفارو

ڪميٽي صدر
(ڏڪار)

وائس صدر
(ڏڪار)

ڪميٽي ميمبر (ڏڪار)

ڪميٽي ميمبر
(ڏڪار)

ڪميٽي ميمبر
(سرڪاري)

ڪميٽي سيڪرٽري
(سرڪاري)

STAIR DETAIL

SCALE 1:20

*CHECK ALL MEASUREMENTS ON SITE BEFORE FABRICATION

SECRETARIAT OF TI
NAIFARU
COUNCI

PROJECT:
RENOVATION OF MPB HA

DESIGNED BY:
ISMAIL YAMAAN YOOSUF
ARCHITECT
NAIFARU COUNCIL

CHECKED BY:
ASHHAM MOHAMED
ASSISTANT DIRECTOR
NAIFARU COUNCIL

APPROVED BY:
MOHAMED RASHEED
COUNCIL PRESIDENT
NAIFARU COUNCIL

DATE:
SEPTEMBER 2021

DWG NO:	SHEET NO:
08	08

Annex 4: Front Elevation

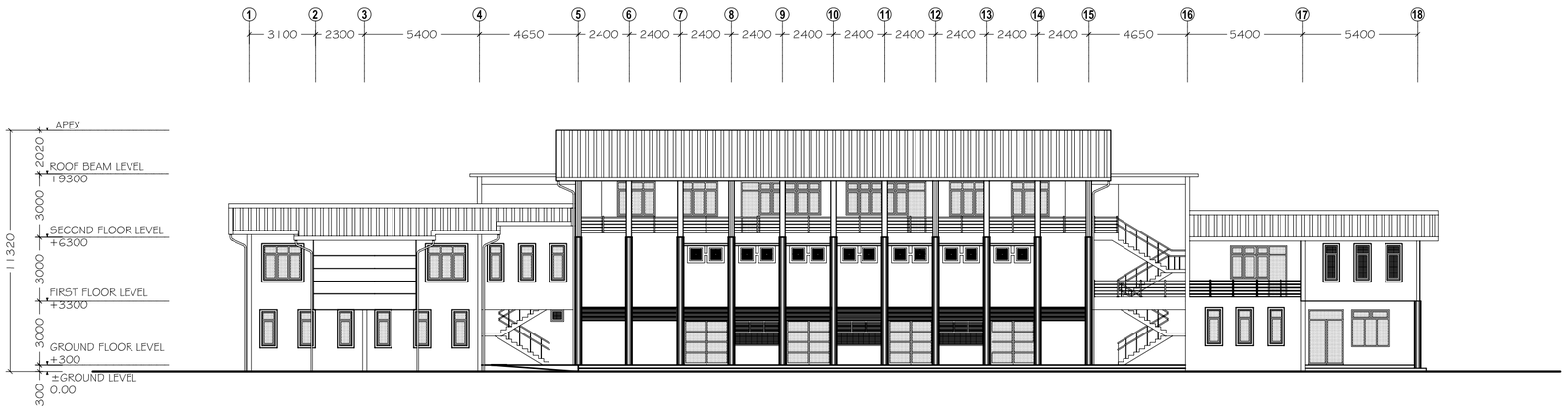

FRONT ELEVATION (E1)

SCALE 1:200

0 0,5 1 2 3 4 5

IF IN DOUBT - ASK - DO NOT SCALE

THE CONTENTS OF THESE DRAWINGS REMAIN THE PROPERTY OF RIYAN DESIGN & MANAGEMENT CONSULTANTS PTE. LTD. ANY USE OTHER THAN THOSE EXPRESSLY STATED IS A VIOLATION OF THIS COPYRIGHT.

A M M E N D M E N T S

PROJECT :

NAIFARU
MULTI-PURPOSE
BUILDING

TITLE :

FRONT ELEVATION (E1)

CLIENT :

PMC
MINISTRY OF EDUCATION

DESIGN BY		
DRAWN BY	--	
CHECKED	--	
DATE	DEC 2006	DWG No
SCALE	1:200	A 13/28
PROJECT No	G/06/05	

riyan
DESIGN & MANAGEMENT
CONSULTANTS
3rd FLOOR, H.COLEEZIUM, AMEENEE MAGU
MALE' 20-05, REPUBLIC OF MALDIVES
TEL: 315049 FAX: 310776 e-mail: rdmc@riyan.com.mv

Annex 5: Rear Elevation

REAR ELEVATION (E3)

SCALE 1:200

0 0.5 1 2 3 4 5

IF IN DOUBT - ASK - DO NOT SCALE

THE CONTENTS OF THESE DRAWINGS REMAIN THE PROPERTY OF RIYAN DESIGN & MANAGEMENT CONSULTANTS PTE. LTD. ANY USE OTHER THAN THOSE EXPRESSLY STATED IS A VIOLATION OF THIS COPYRIGHT.

A M M E N D M E N T S

PROJECT :

NAIFARU MULTI-PURPOSE BUILDING

TITLE :

REAR ELEVATION (E3)

CLIENT :

PMC
MINISTRY OF EDUCATION

DESIGN BY		
DRAWN BY	--	
CHECKED	--	
DATE	DEC 2006	DWG No
SCALE	1:200	A 15/28
PROJECT No	G/06/05	

DESIGN & MANAGEMENT CONSULTANTS
3rd FLOOR, H.GOLEEZIUM, AMEENEE MAGU
MALE' 20-05, REPUBLIC OF MALDIVES
TEL: 315049 FAX: 310776 e-mail: rdmc@riyan.com.mv
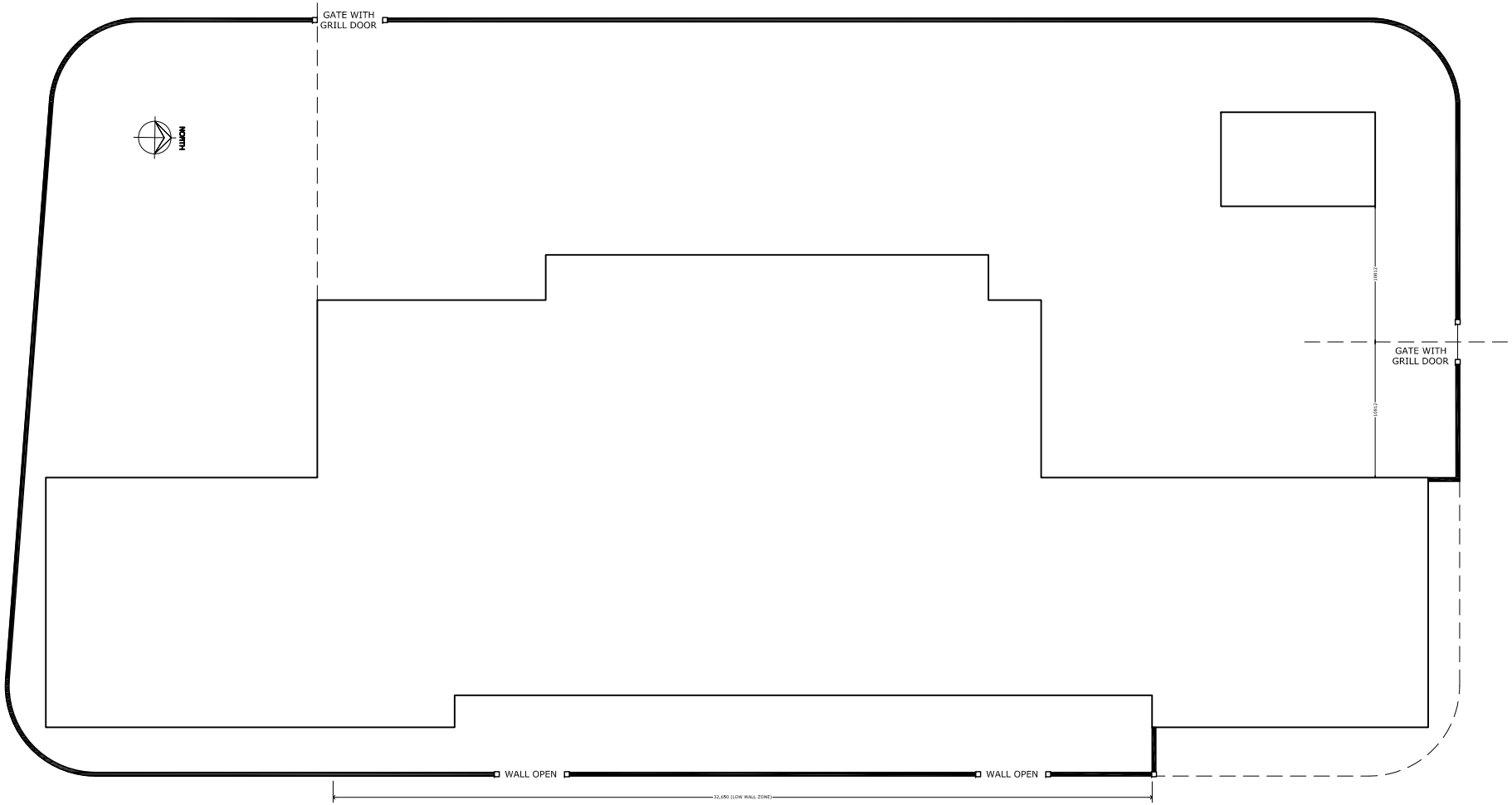
Annex 6: MPB Building Front & Site