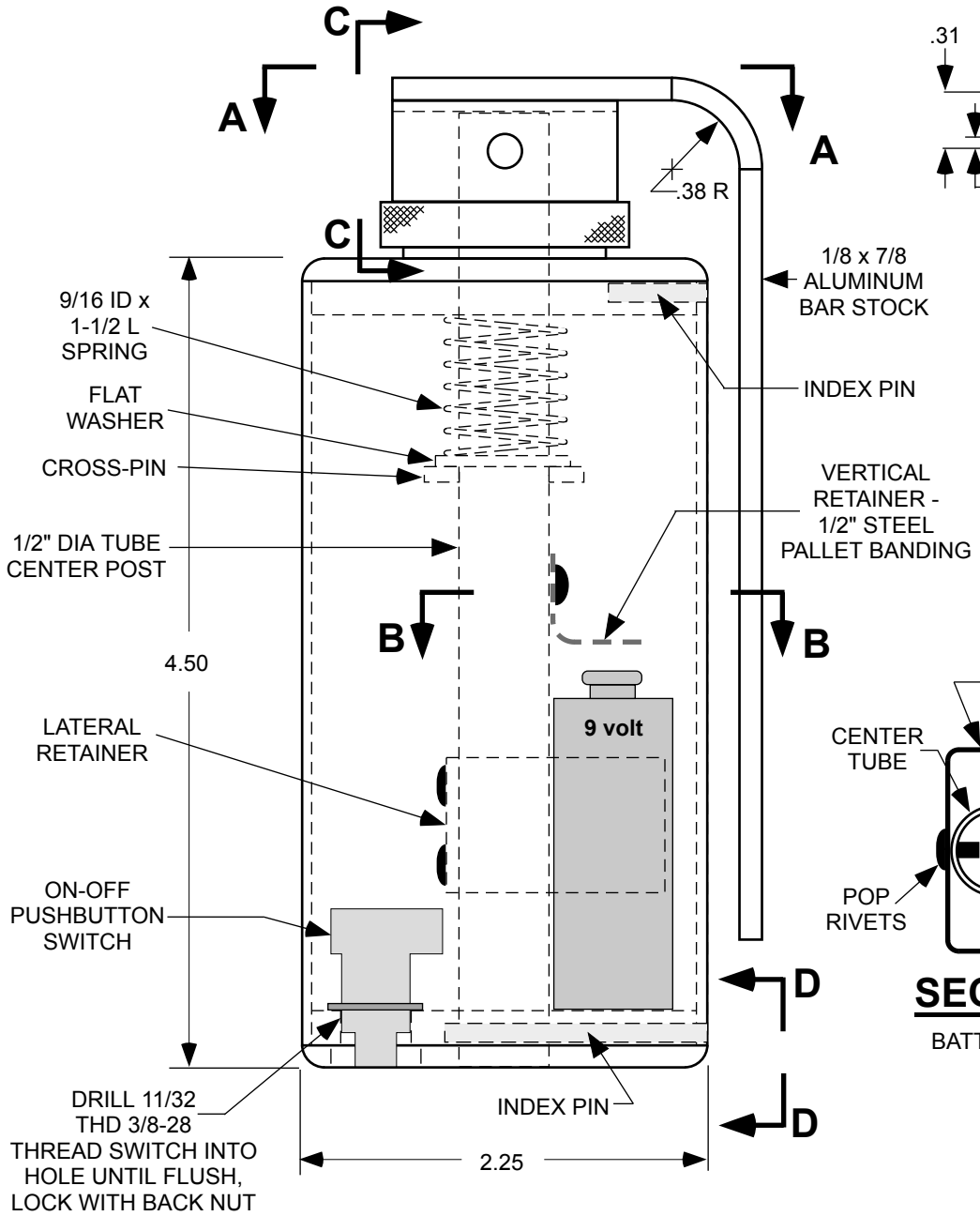

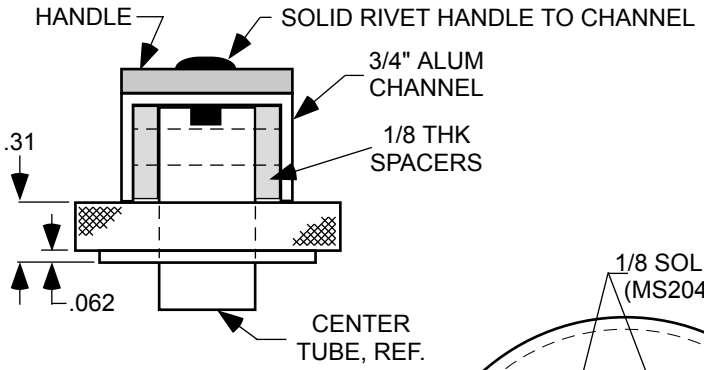

VIEW C-C

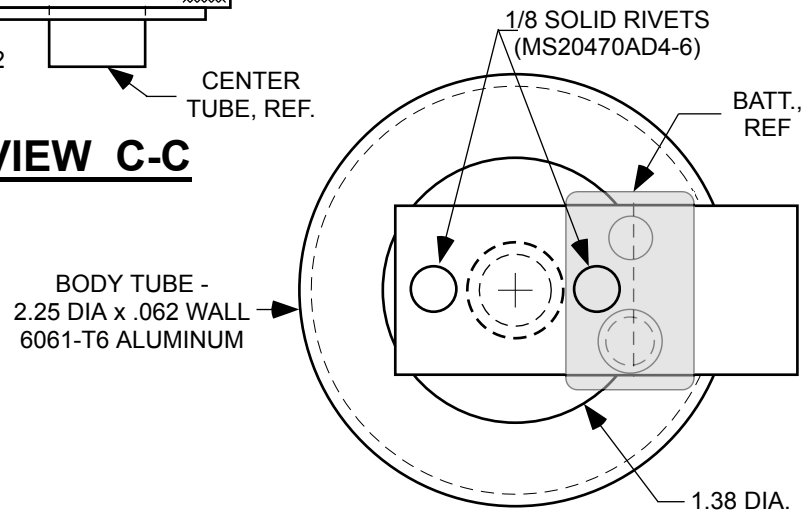

VIEW A-A

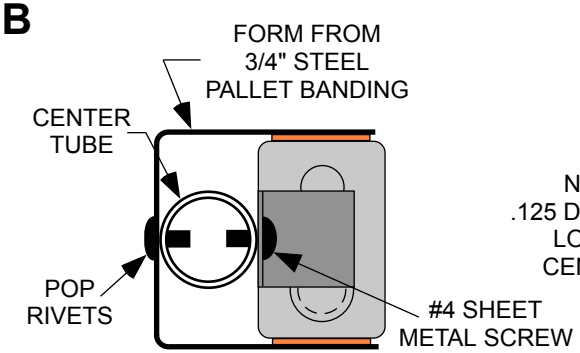

SECTION B-B

BATTERY RETAINERS

NOTCH BACK OF TUBE TO ENGAGE
.125 DIA INDEX PINS AT UPR AND LWR ENDS.
LOWER PIN SHOULD PASS THROUGH
CENTER TUBE, LOCKING IT INTO BASE.

VIEW D-D

SCALE 2:1

TITLE	GRENADE - ANTI SPECTRAL, CHARGED PROTON BURST		
SCALE 1:1	MEDIA SIZE 8.5 x 11	PG 1 OF 3	
DRAWN BY "Busybuildr"	DATE 6-14-08		