Jul.1.2026 Copyright 2026 HIROSE ELECTRIC CO., LTD. All Rights Reserved.
In case of consideration for using Automotive equipment / device which demand high reliability, kindly contact our sales window correspondents.

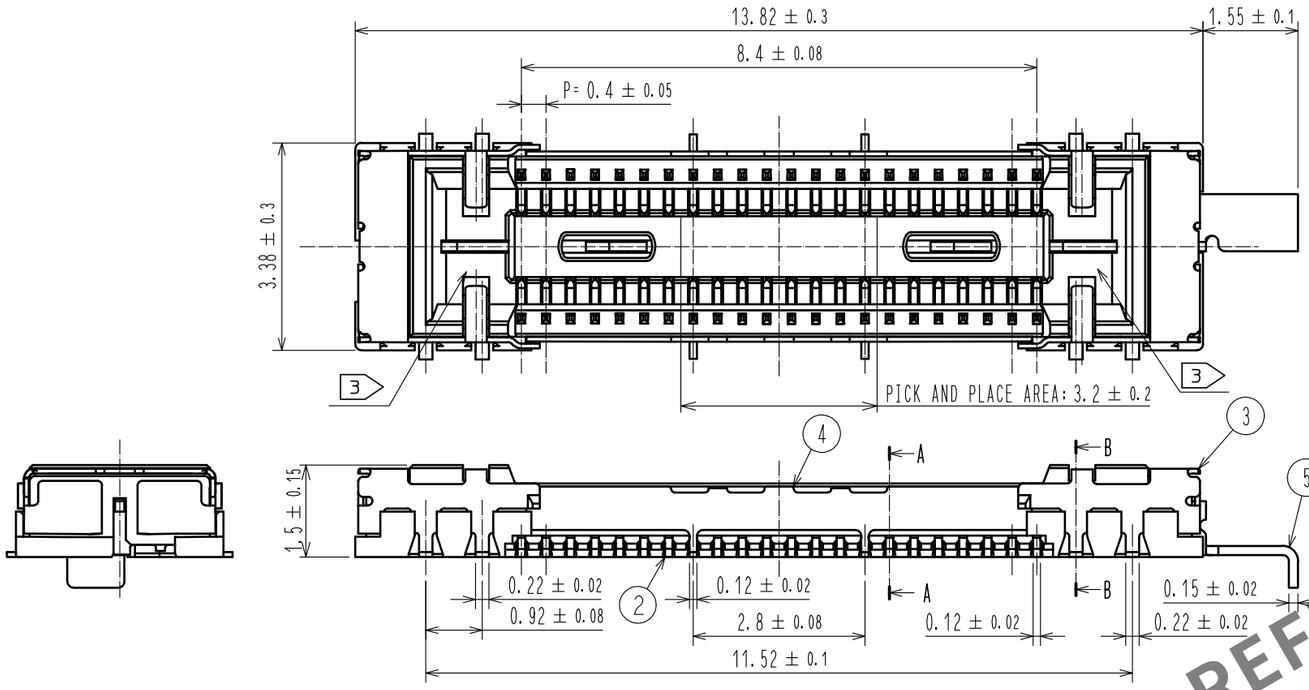

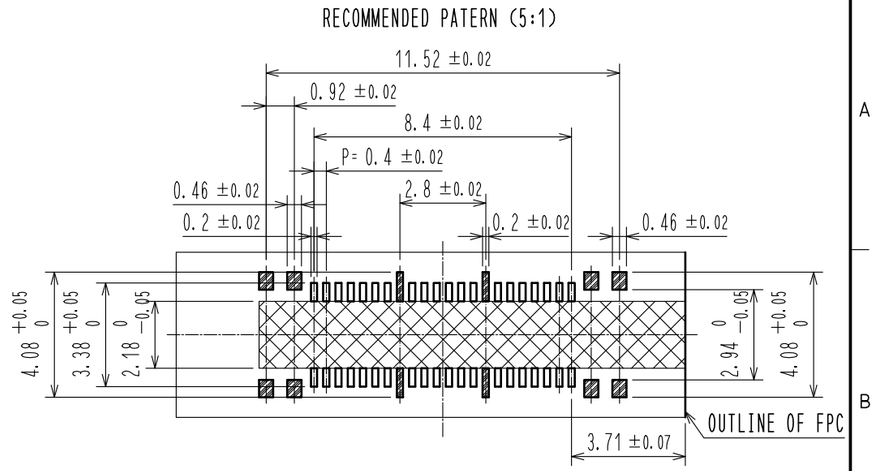

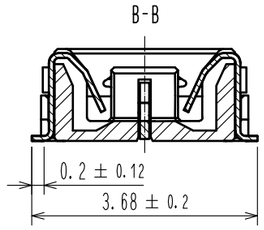

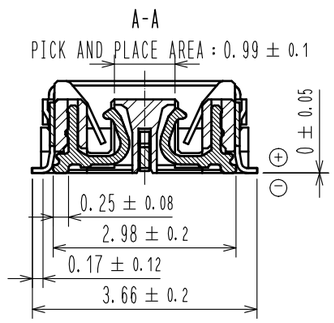

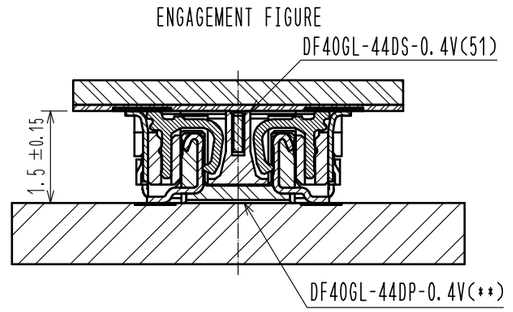

NOTES 1. ALL LEAD CO-PLANARITY SHALL BE 0.1mm MAX.
2 PLATING SPECIFICATIONS
CONTACT AREA : GOLD 0.05μm MIN
SMT LEAD : GOLD 0.05μm MIN
UNDER PLATING : NICKEL 1μm MIN
(SURFACE : SEALING)
3 HRS MARK AND CAV No. ARE INDICATED IN APPROX POSITION SHOWN.

NO.	MATERIAL	FINISH , REMARKS	NO.	MATERIAL	FINISH , REMARKS
5	STAINLESS STEEL		10	PS	CLEAR(REINFORCEMENT COLLAR)
4	PHOSPHOR BRONZE	2	9	PS	BLACK(PLASTIC REEL)
3	PHOSPHOR BRONZE	2	8	POLYESTER	CLEAR(COVER TAPE)
2	PHOSPHOR BRONZE	2	7	PS	CLEAR(EMBOSSED CARRIER TAPE)
1	LCP	BLACK. UL94 V-0	6	STAINLESS STEEL	

UNITS	SCALE	COUNT	DESCRIPTION OF REVISIONS	DESIGNED	CHECKED	DATE
mm	10 : 1	0				

HIROSE ELECTRIC CO., LTD.

APPROVED	MO. ISHIDA	15.02.06
CHECKED	WR. FUKUCHI	15.02.06
DESIGNED	SJ. WADA	15.02.06
DRAWN	SJ. WADA	15.02.06

DRAWING NO.	EDC-355293-51-02
PART NO.	DF40GL-44DS-0.4V(51)
CODE NO.	CL684-4411-0-51

0 1/2

HRS DRAWING FOR REFERENCE

Jul.1.2026 Copyright 2026 HIROSE ELECTRIC CO., LTD. All Rights Reserved.
In case of consideration for using Automotive equipment / device which demand high reliability, kindly contact our sales window correspondents.

EMBOSSED CARRIER TAPE PACKAGING (5:1)

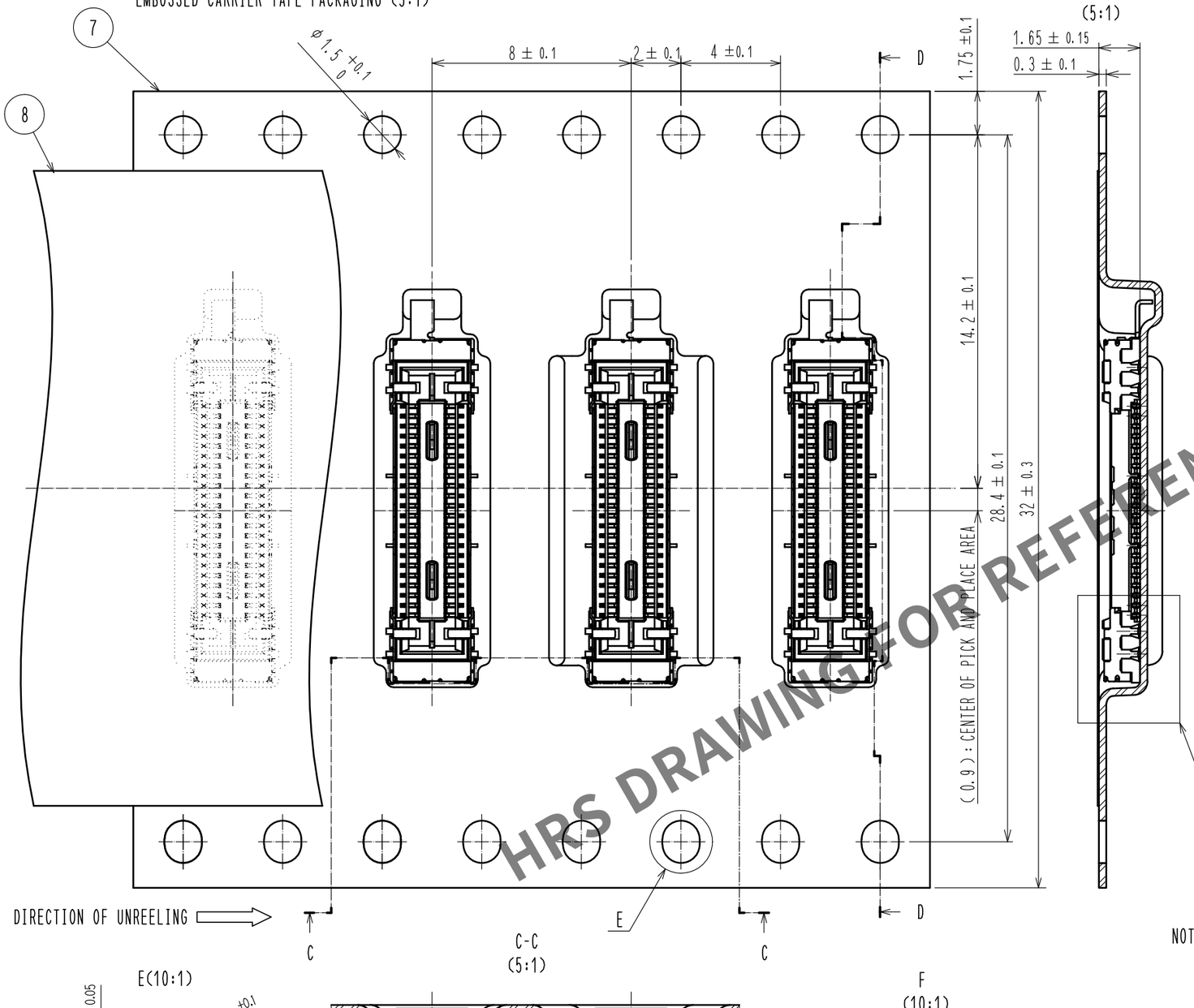

D-D
(5:1)

STYLE AND DIMENTION OF REEL (FREE)

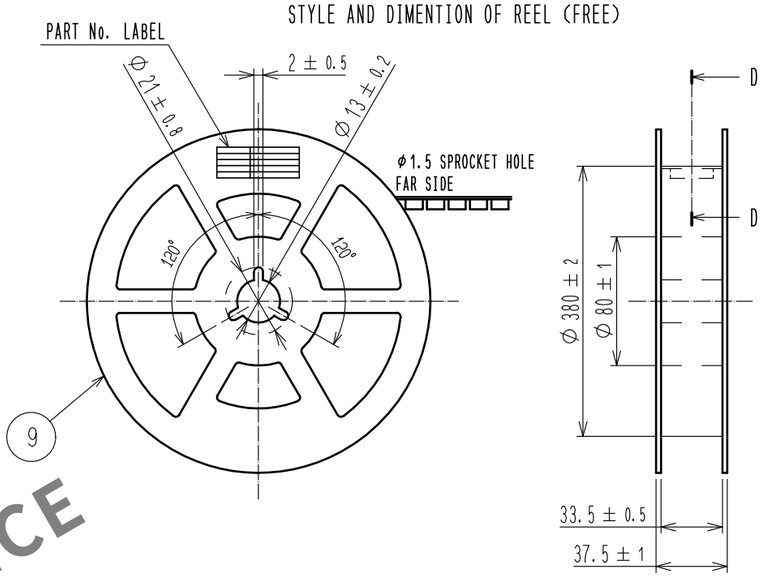

7 DETAIL OF PART No. LABEL

製造年月日	** ** **
製品コード	CL684-4411-0-51
製品名	DF40GL-44DS-0.4V(51)
数量	4,000
納入者	ヒロセ電機(株)

D-D (FREE)

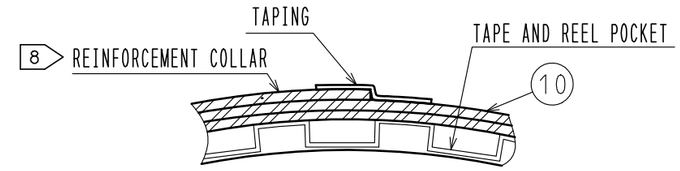

E(10:1)

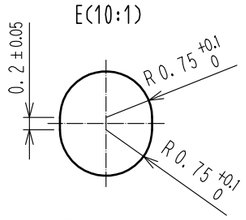

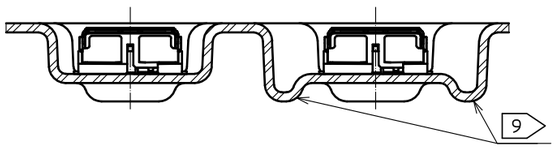

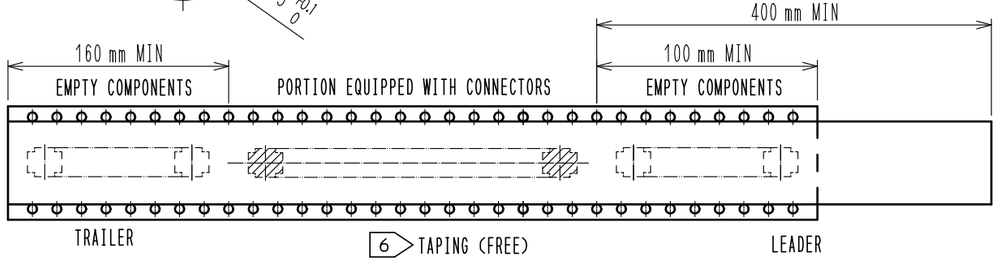

F
(10:1)

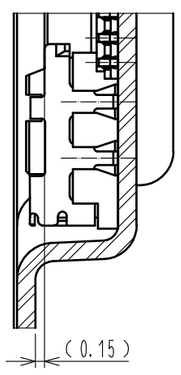

NOTES 4. PER REEL 4000 CONNECTORS.
5. THE DIMENSIONS IN PARENTHESES ARE FOR REFERENCE.
6 REFER TO JIS C 0806 (IEC 60286-3, PACKING OF COMPONENTS FOR AUTOMATIC HANDLING)
7 DETAIL OF PART No. LABEL IS WRITTEN IN JAPANESE.
PART NO. LABEL DESCRIBES THE FOLLOWING INFORMATION FROM TOP.
PRODUCTION DATE:
PRODUCT CODE: CL684-4411-0-51
PART NUMBER: DF40GL-44DS-0.4V(51)
NUMBER OF PIECES: 4000 PIECES
SUPPLIER NAME: HIROSE ELECTRIC CO., LTD.
8 AFTER PACKAGING, ROLL 2 METERS OF THE REINFORCEMENT COLLAR TO OUTER CIRCUMFERENCE OF TAPE AND REEL POCKET, AND TAPE DOWN AT THE END THE COLLAR.
9 ONE OF SEVERAL IS DIFFERENT IN FORM OF THE EMBOSSED CARRIER TAPE.

HRS DRAWING FOR REFERENCE

DRAWING NO.	EDC-355293-51-02
PART NO.	DF40GL-44DS-0.4V(51)
CODE NO.	CL684-4411-0-51

△0 2/2