HPE Aruba Networking 610 Series Campus Access Points

Installation Guide

Hewlett Packard Enterprise

Copyright Information

© Copyright 2025 Hewlett Packard Enterprise Development LP.

Open Source Code

This product includes code licensed under certain open source licenses which require source compliance. The corresponding source for these components is available upon request. This offer is valid to anyone in receipt of this information and shall expire three years following the date of the final distribution of this product version by Hewlett Packard Enterprise Company. To obtain such source code, please check if the code is available in the HPE Software Center at https://myenterpriselicense.hpe.com/cwp-ui/software but, if not, send a written request for specific software version and product for which you want the open source code. Along with the request, please send a check or money order in the amount of US $10.00 to:

Hewlett Packard Enterprise Company
Attn: General Counsel
WW Corporate Headquarters
1701 E Mossy Oaks Rd, Spring, TX 77389
United States of America.

Contents

Contents 1
About This Guide 2
Guide Overview 2
Related Documentation 2
Contacting Support 2
Hardware Overview 3
Access Point Views 3
Access Point Specifications 5
LED 5
Bluetooth Low Energy Radios 7
Console Port 7
Ethernet Port 7
Kensington Lock Slot 7
USB Interface 7
Reset Button 8
Power 8
Installation 10
Before You Begin 10
Access Point Installation 11
Software 11
Verifying Post-Installation Connectivity 12
Specifications, Safety, and Compliance 13
Electrical 13
Environmental 13
Regulatory Information 13
Brazil 14
Safety and Regulatory Compliance 14
Canada 14
EU & UK Regulatory Conformity 15
European Union and United Kingdom 15
México 16
Ukraine 16
Taiwan 16
UKCA 17
United States 17

Chapter 1
About This Guide

This document describes the hardware features of the HPE Aruba Networking 610 Series Campus Access Points. It provides a detailed overview of the physical and performance characteristics of each access point model and explains how to install the access point.

Guide Overview

- Hardware Overview provides a detailed hardware overview of the HPE Aruba Networking 610 Series Campus Access Points .
- Installation describes how to install the HPE Aruba Networking 610 Series Campus Access Points.
- lists the HPE Aruba Networking 610 Series Campus Access Points's technical specifications, safety, and regulatory compliance information.

Related Documentation

You require the following documents for the complete management of HPE Aruba Networking 610 Series Campus Access Points.

- Latest document of the software user guide: https://www.arubanetworks.com/techdocs/ArubaDocPortal/content/cons-aos-home.htm
- CLI bank: https://www.arubanetworks.com/techdocs/CLI-Bank/Content/Home.htm

Contacting Support

Table 1: *Contact Information*

Main Site	arubanetworks.com
Support Site	https://networkingsupport.hpe.com/home
Airheads Social Forums and Knowledge Base	community.arubanetworks.com
North American Telephone	1-800-943-4526 (Toll Free) 1-408-754-1200
International Telephone	arubanetworks.com/support-services/contact-support/
Software Licensing Site	lms.arubanetworks.com
End-of-life Information	arubanetworks.com/support-services/end-of-life/
Security Incident Response Team	Site: arubanetworks.com/support-services/security-bulletins/ Email: aruba-sirt@hpe.com

Chapter 2
Hardware Overview

The HPE Aruba Networking 610 Series Campus Access Points are high-performance, dual-radio, tri-band infrastructure devices that support the IEEE 802.11ax WLAN standard in the 6GHz band (Wi-Fi 6E), 5GHz, and 2.4GHz bands. Additionally, this series delivers capacity with two 2x2 MIMO (Multiple-Input, Multiple-Output) and OFDMA (Orthogonal Frequency Division Multiple Access) radios while also supporting IEEE 802.11a/b/g/n/ac wireless devices.

Access Point Views

Figure 1 *AP-615 Access Point Front View*

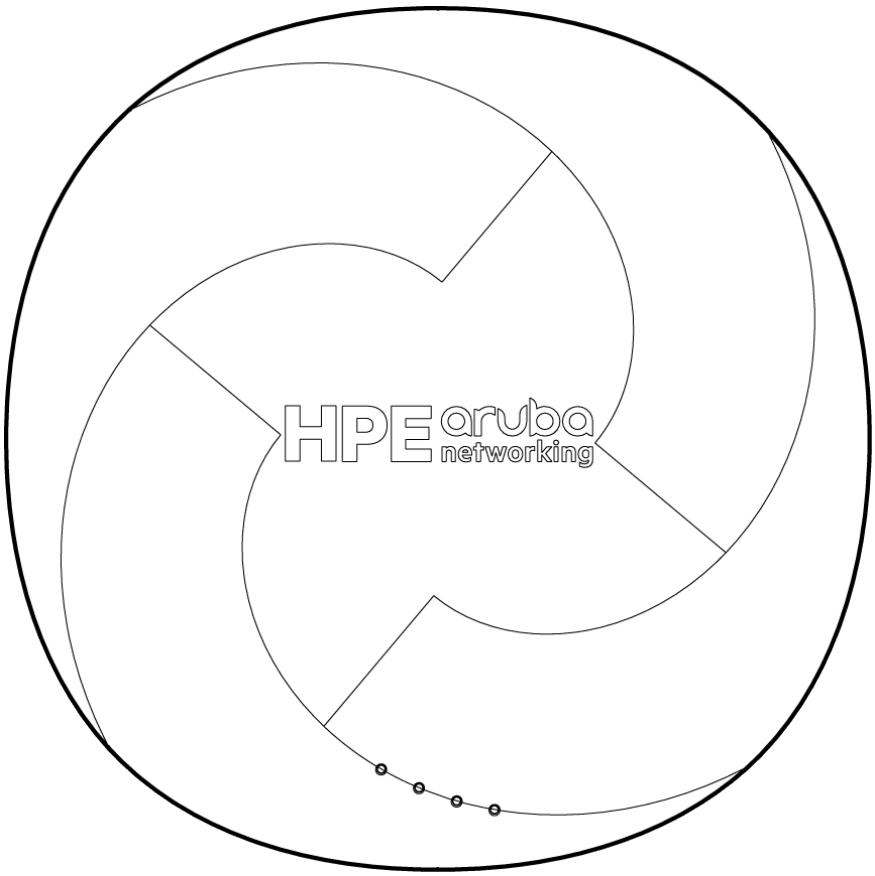

Figure 2 *AP-615 Access Point Side Views*

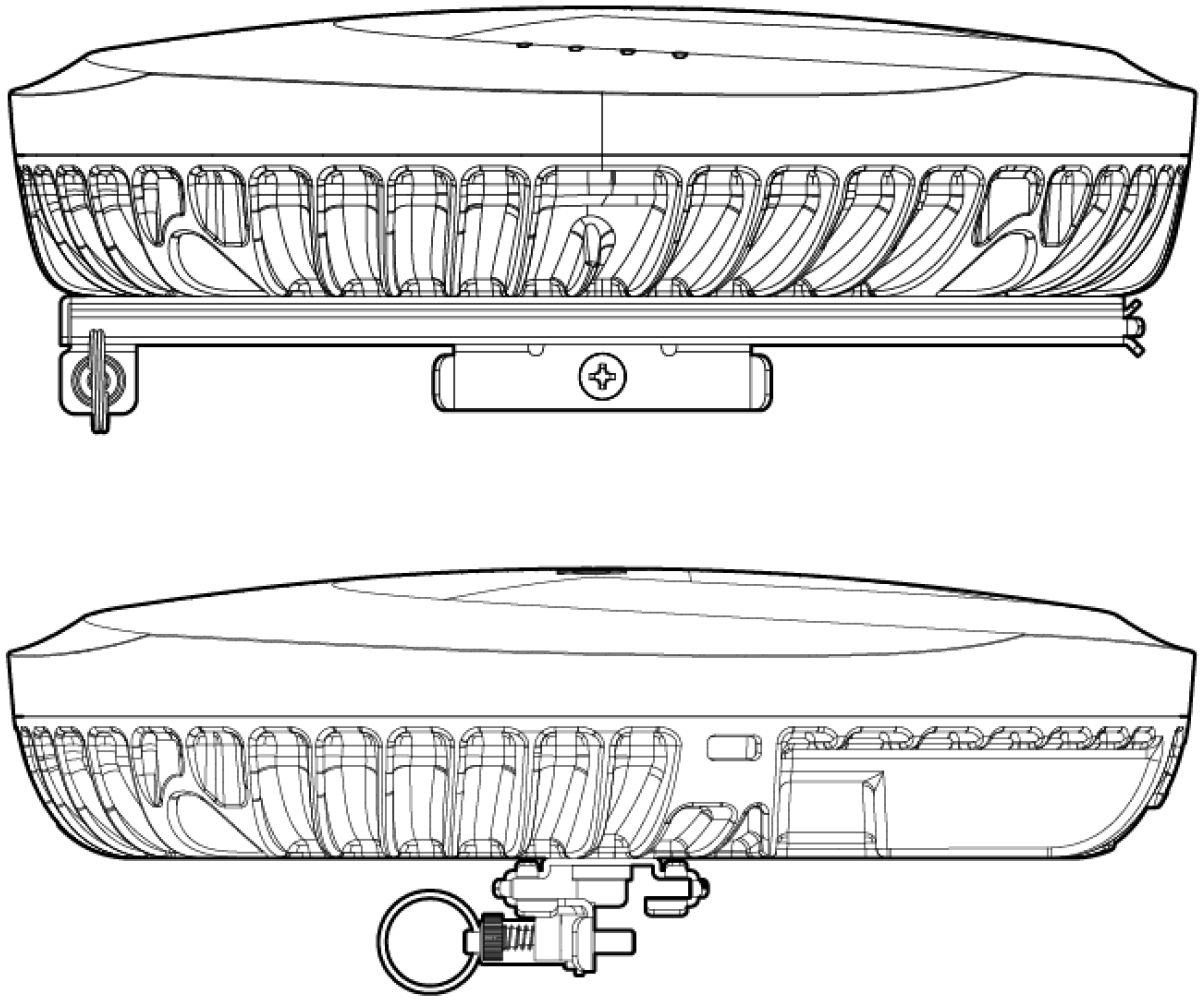

1	E0 Ethernet port
2	DC power interface
3	Kensington lock

Figure 3 *Access Point Rear View*

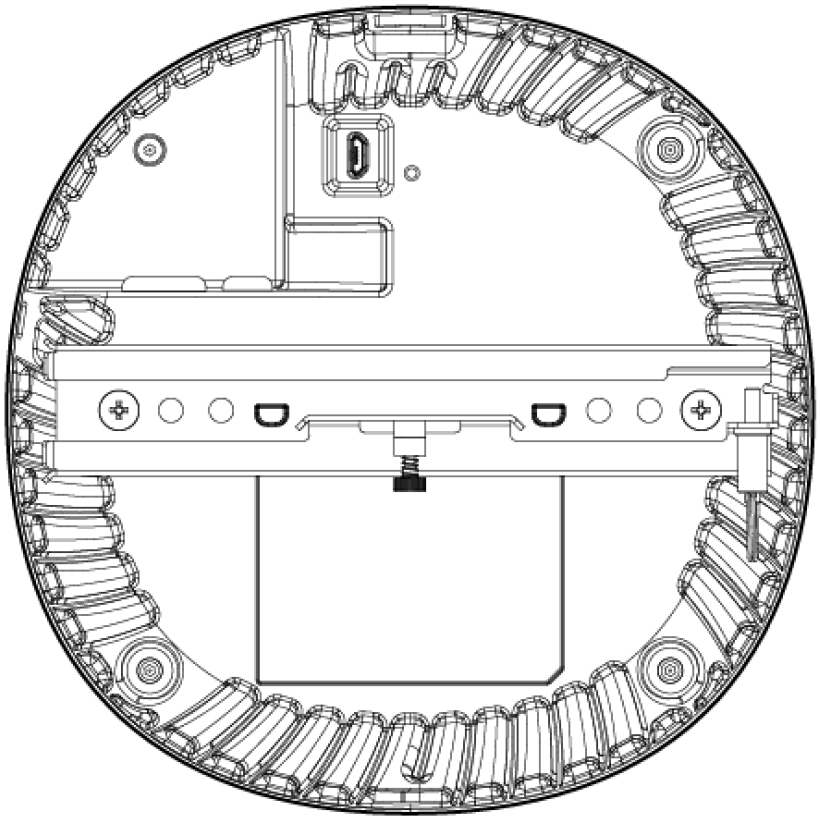

1	Console port
2	AP mount brace

Access Point Specifications

Table 2: *610 Series Campus Access Point Dimensions*

Width (W)	Height (H)	Depth (D)	Weight
160 mm (6.29 in)	160 mm (6.29 in)	39mm (1.53 in)	520g (1.14 lbs)

NOTE

The 610 SeriesCampus Access Point Dimensions table does not include the mounting bracket.

LED

The LED displays located on the front panel of the access point, labeled as "Sys", indicate the system status of the access point.

System Status LED

Table 3: *System Status LED*

Color/State	Meaning
Off	Device Powered off
Green- solid	Device ready, fully functional, no network restrictions
Green- blinking [1]	Device booting, not ready
Green- flashing off [2]	Device ready, fully functional, either uplink negotiated in sub-optimal speed (<1Gbps)
Green- flashing on[3]	Device in deep-sleep mode
Amber- solid	Device ready, restricted power mode (limited PoE power available, or IPM restrictions applied), no network restrictions
Amber- flashing off[2]	Device ready, restricted power mode (limited PoE power available, or IPM restrictions applied), uplink negotiated in sub-optimal speed (<1Gbps)
Red	System error condition - Immediate attention required

1. Blinking: one second on, one second off, 2 seconds cycle.
2. Flashing off: mostly on, fraction of a second off, 2 seconds cycle.
3. Flashing on: mostly off, fraction of a second on, 2 seconds cycle.

Radio Status LED

The Radio Status LED table below is applicable to 2G, 5G, and 6G labels.

Table 4: *Radio Status LED*

Color/State	Meaning
Off	Device powered off, or radio disabled
Green- solid	Radio enabled in access (AP) mode
Green- flashing off	Radio enabled in uplink or mesh mode
Amber- solid	Radio enabled in monitor or spectrum analysis mode

LED Display Settings

The LEDs have three operating modes that can be selected in the system management software:

- Default mode: refer to Table 3 and Table 4.
- Off mode: all LEDs are off
- Blink mode: all LEDs blink green (synchronized)

To force the LEDs into off mode or back to software defined mode, press the reset button for a short duration (less than 10 seconds).

Bluetooth Low Energy Radios

610 Series access points are equipped with an integrated BLE and 802.15.4 radio that provide the following capabilities:

- location and asset-tracking applications
- wireless console access
- IoT gateway applications

Console Port

The console port is a Micro-B connector is located on the back of this device. Use the proprietary AP-CBL-SERU cable or AP-MOD-SERU module (sold separately) for direct management of this device when connected to a serial terminal or laptop. For pin-out details, refer to Figure 4.

Figure 4 *Micro-B Port Pin-out*

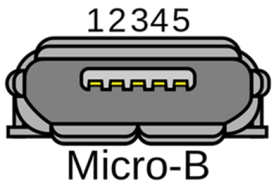

1: NC
2: RXD
3: TXD
4: GND
5: GND

Ethernet Port

The 610 Series access point is equipped with one active Ethernet port (E0), with 100/1000/2500 Base-T, auto-sensing MDI/MDX, which supports uplink connectivity when linked by an Ethernet cable. Refer to Figure 5 for a detailed port pin-out.

Figure 5 *Ethernet Port Pin-Out*

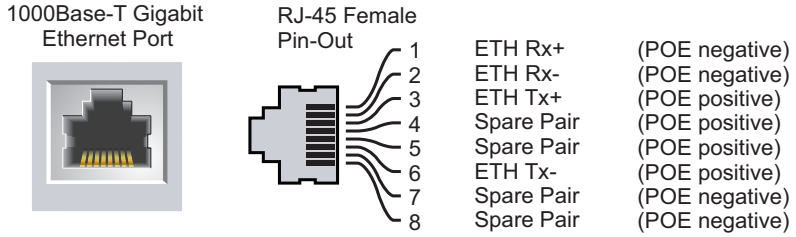

Kensington Lock Slot

The 610 Series is equipped with a Kensington lock slot for additional physical security.

USB Interface

The USB 2.0 interface located on the top of the is 610 Series compatible with selected cellular modems and other peripherals. When active, this port can supply up to 5W/1A to a connected device.

Figure 6 *610 Series USB*

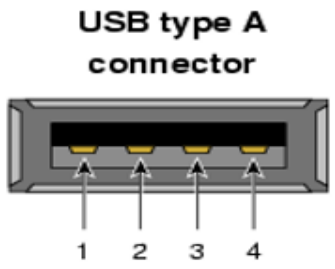

Reset Button

The reset button located on the bottom of the device can be used to reset the access point to factory default settings or turn off/on the LED display.

Use one of the following methods to reset the access point to factory default settings:

- To reset during normal operation:
  - Hold the reset button for more than 10 seconds while the access point is running.
  - Release the reset button.
- To reset during power up, hold the reset button while the access point is powering up.

The system status LED will flash again within 15 seconds indicating that the reset is completed. The access point will now continue to boot with the factory default settings.

To toggle the LED display between Off and Blinking, during the normal operation of the access point, shortly press and release the reset button using a small, narrow object, such as a paperclip.

Power

The 610 Series access point supports both direct DC power and Power over Ethernet (PoE) on port E0. The E0 Ethernet port's PoE-in capability allows the AP to draw power from an 802.3af/at PoE power source. When both DC and PoE power sources are available, DC power takes priority over PoE.

NOTE

Power sources are sold separately; see the 610 Series Ordering Guide for details.

Table 5: *PoE operating modes*

PoE source	class 4 (802.3at)	class 3 (802.af)
Power budget	25.5W	13.9
Power mode	Unrestricted	Restricted
USB port	Enabled	Disabled
Ethernet	Enabled	Enabled
MIMO	2x2	2x2
Max RF power reduction	0dB	0dB

NOTE

The PoE input rating is 57V max|0.3A. Each pair of wires in the Ethernet cable consists of 0.3A.

Chapter 3
Installation

Before You Begin

Refer to the sections below before beginning the installation process

CAUTION

FCC Statement: Improper termination of access points installed in the United States configured to non-US model controllers will be in violation of the FCC grant of equipment authorization. Any such willful or intentional violation may result in a requirement by the FCC for immediate termination of operation and may be subject to forfeiture (47 CFR 1.80).

Pre-Installation Checklist

Before installing your 610 Series access points, ensure that you have the following:

- A mount kit compatible with the AP and mount surface
- Cat5e or better UTP cable with network access

Optional items

- A compatible power adapter with cord
- A compatible PoE midspan injector with power cord
- An AP-CBL-SERU console cable
- An AP-MOD-SERU console module
- A USB dongle device

Also, make sure at least one of the following network services is supported:

- HPE Aruba Networking Discovery Protocol (ADP)
- DNS server with an “A” record
- DHCP Server with vendor specific options

NOTE

HPE Aruba Networking, in compliance with governmental requirements, has designed the 610 Series access points so that only authorized network administrators can change configuration settings. For more information about AP configuration, refer to theAP Software Quick Start Guide.

NOTE

If a power adapter other than the HPE Aruba Networking-approved adapter is used in the US or Canada, it should be NRTL listed, with an output rated 12V DC, minimum 2A, marked “LPS” and “Class 2,” and suitable for plugging into a standard power receptacle in the US and Canada.

Identifying Specific Installation Locations

Use the access point placement map generated by HPE Aruba Networking 610 Series RF Plan software application to determine the proper installation location(s). Each location should be as close as possible to the center of the intended coverage area and should be free from obstructions or obvious sources of interference. These RF absorbers/reflectors/interference sources will impact RF propagation and should be accounted for during the planning phase and adjusted for in RF plan.

Identifying Known RF Absorbers/Reflectors/Interference Sources

Identifying known RF absorbers, reflectors, and interference sources while in the field during the installation phase is critical. Make sure that these sources are taken into consideration when you attach an access point to its fixed location.

RF absorbers include:

- Cement/concrete—Old concrete has high levels of water dissipation, which dries out the concrete, allowing for potential RF propagation. New concrete has high levels of water concentration in the concrete, blocking RF signals.
- Natural Items—Fish tanks, water fountains, ponds, and trees.
- Brick

RF reflectors include:

- Metal Objects—Metal pans between floors, rebar, fire doors, air conditioning/heating ducts, mesh windows, blinds, chain link fences (depending on aperture size), refrigerators, racks, shelves, and filing cabinets.
- Do not place an access point between two air conditioning/heating ducts. Make sure that access points are placed below ducts to avoid RF disturbances.

RF interference sources include:

- Microwave ovens and other 2.4 or 5 GHz objects (such as cordless phones).
- Cordless headset such as those used in call centers or lunch rooms.

CAUTION

Portable RF communications equipment should be used no closer than 30 cm (12 inches) to any part of the access point. Otherwise, degradation of the performance of this equipment could result.

Access Point Installation

CAUTION

All HPE Aruba Networking access points should be professionally installed by an HPE Aruba Networking-Certified Mobility Professional (ACMP). The installer is responsible for ensuring that grounding is available and meets applicable national and electrical codes. Failure to properly install this product may result in physical injury and/or damage to property.

CAUTION

Tous les points d'accès HPE Aruba Networking doivent impérativement être installés par un professionnel agréé. Ce dernier doit s'assurer que l'appareil est mis à la terre et que le circuit de mise à la terre est conforme aux codes électriques nationaux en vigueur. Le fait de ne pas installer correctement ce produit peut entraîner des blessures corporelles et / ou des dommages matériels.

CAUTION

For indoor use only. The access point, AC adapter, and all connected cables are not to be installed outdoors. This stationary device is intended for stationary use in partly temperature controlled weather-protected environments (class 3.2 per ETSI 300 019).

Software

HPE Aruba Networking 610 Series requires ArubaOS 10.5.0.0 or HPE Aruba Networking Instant8.11.0.0 or later. For instructions on choosing operating modes and initial software configuration, refer to theAP Software Quick Start Guide.

HPE Aruba Networking access points are classified as radio transmission devices, and are subject to government regulations of the host country. The network administrator(s) is/are responsible for ensuring that configuration and operation of this equipment is in compliance with their country's regulations. For a complete list of approved channels in your country, refer to the HPE Aruba Networking Downloadable Regulatory Table at https://www.arubanetworks.com/techdocs/DRT/Default.htm.

Verifying Post-Installation Connectivity

The integrated LEDs on the access point can be used to verify that the access point is receiving power and initializing successfully (see Table 1 and Table 2). Refer to the **AP Software Quick Start Guide** for further details on verifying post-installation network connectivity.

Electrical

Ethernet

- E0: 100/1000/2500 Base-T auto-sensing Ethernet RJ-45 Interfaces

Power

- Power over Ethernet (IEEE 802.3af/at compliant)
- 12V DC power interface, support powering through AC-to-DC power adapter
- Maximum power consumption: Refer to datasheet

Environmental

- Operating
  - Temperature: 0°C to +50°C (+32°F to +122°F)
  - Humidity: 5% to 95% non-condensing
- Storage
  - Temperature: -40ºC to 70ºC (-40ºF to 158ºF)
  - Humidity: 5% to 95% non-condensing

Regulatory Information

For the purpose of regulatory compliance certifications and identification, this product has been assigned a unique regulatory model number (RMN). The regulatory model number can be found on the product nameplate label, along with all required approval markings and information. When requesting compliance information for this product, always refer to this regulatory model number. The regulatory model number RMN is not the marketing name or model number of the product.

The following regulatory model numbers apply to the 610 Series

- AP-615 RMN: APIN0615

HPE Aruba Networking provides a multi-language document that contains country-specific restrictions and additional safety and regulatory information for all Aruba access points. This document can be viewed or downloaded at www.arubanetworks.com.

CAUTION

Changes or modifications not expressly approved by the party responsible for compliance could void the user's authority to operate this equipment.

Toute modification effectuée sur cet équipement sans l'autorisation expresse de la partie responsable de la conformité est susceptible d'annuler son droit d'utilisation.

Brazil

Este equipamento não tem direito à proteção contra interferência prejudicial e não pode causar interferência em sistemas devidamente autorizados.

O uso deste equipamento é restrito a ambientes fechados e proibido em plataformas petrolíferas, carros,

trens, embarcações e no interior de aeronaves abaixo de 3.048 m (10.000 pés).

Safety and Regulatory Compliance

CAUTION

RF Radiation Exposure Statement: This equipment complies with RF radiation exposure limits. This equipment should be installed and operated with a minimum distance of 7.87 inches (20cm) between the radiator and your body for 2.4 GHz, 5 GHz, and 6GHz operations. This transmitter must not be co-located or operating in conjunction with any other antenna or transmitter.

CAUTION

Déclaration e la concernant l'exposition aux rayonnements à fréquence radioélectrique (FR): Cet appareil est conforme aux limites d'exposition aux rayonnements FR établies par la FCC. Il doit être installé et utilisé à une distance minimale de 20 cm (7,87 pouces) entre le radiateur et votre corps, qu'il opère sur la bande 2,4 GHz, 5 GHz, ou 6GHz. Cet émetteur ne doit pas être installé ou utilisé à proximité immédiate d'une autre antenne ni d'un autre transmetteur.

CAUTION

The device could automatically discontinue transmission in case of absence of information to transmit, or operational failure. Note that this is not intended to prohibit transmission of control or signaling information or the use of repetitive codes where required by the technology.

Canada

This Class B digital apparatus meets all of the requirements of the Canadian Interference-Causing Equipment Regulations.

This device contains licence-exempt transmitter(s)/receiver(s) that comply with Innovation, Science and Economic Development Canada's licence-exempt RSS(s). Operation is subject to the following two conditions: (1) This device may not cause interference; and (2) This device must accept any interference, including interference that may cause undesired operation of the device.

When operated in 5.15 to 5.25 GHz frequency range, this device is restricted to indoor use to reduce the potential for harmful interference with co-channel Mobile Satellite Systems.

a). Operation shall be limited to indoor use only;

(b). Operation on oil platforms, cars, trains, boats and aircraft shall be prohibited except for on large aircraft flying above 10,000 ft.

Déclaration d'Industrie Canada

Cet appareil numérique de classe B respecte toutes les exigences du Règlement sur le matériel brouilleur du Canada.

Cet appareil contient des émetteurs / récepteurs exemptés de licence qui sont conformes aux RSS exempts de licence d'Innovation, Sciences et Développement économique Canada. Son fonctionnement est soumis aux deux conditions suivantes: (1) ce périphérique ne doit pas provoquer d'interférences, et (2) ce périphérique doit accepter toute interférence, y compris les interférences susceptibles de provoquer un dysfonctionnement.

En cas d'utilisation dans la plage de fréquences de 5,15 à 5,25 GHz, cet appareil doit uniquement être utilisé à intérieur afin de réduire les risques d'interférence avec les systèmes satellites mobiles partageant le même canal.

(1) Le fonctionnement doit être limité à une utilisation en intérieur uniquement ;

(2) L'exploitation sur les plates-formes pétrolières, les voitures, les trains, les bateaux et les aéronefs est interdite, sauf pour les gros aéronefs volant au-dessus de 10 000 pieds.

EU & UK Regulatory Conformity

The Declaration of Conformity made under Radio Equipment Directive 2014/53/EU as well as the United Kingdom's Radio Equpment Regulations 2017/UK is available for viewing at: www.hpe.com/eu/certificates. Select the document that corresponds to your device's model number as it is indicated on the product label.
Compliance is only assured if the HPE Aruba Networking approved accessories as listed in the ordering guide are used. To order accessories, visit: https://www.arubanetworks.com/assets/og/OG_610Series.pdf.

Wireless Channel Restrictions

5150-5350 MHz and 5945-6425 MHz bands are limited to indoor only in the following countries; Austria (AT), Belgium (BE), Bulgaria (BG), Croatia (HR), Cyprus (CY), Czech Republic (CZ), Denmark (DK), Estonia (EE), Finland (FI), France (FR), Germany (DE), Greece (GR), Hungary (HU), Iceland (IS), Ireland (IE), Italy (IT), Latvia (LV), Liechtenstein (LI), Lithuania (LT), Luxembourg (LU), Malta (MT), Netherlands (NL), Norway (NO), Poland (PL), Portugal (PT), Romania (RO), Slovakia (SK), Slovenia (SL), Spain (ES), Sweden (SE), Switzerland (CH), Turkey (TR), United Kingdom (UK) (NI).

Radio	Frequency Range MHz	Max EIRP
BLE/Zigbee	2402-2480	10 dBm
	2412-2472	20 dBm
	5150-5250	23 dBm
	5250-5350	23 dBm
Wi-Fi	5470-5725	30 dBm
	5725-5850	14 dBm
	5945-6425	23 dBm

CAUTION

Lower power radio LAN product operating in 2.4 GHz and 5 GHz bands. Please refer to the ArubaOS User Guide/Instant User Guide for details on restrictions.

European Union and United Kingdom

This device is limited for indoor use. Use in trains with metal-coated windows (or similar structures made of materials with comparable attenuation characteristic) and aircraft is permitted. Operations in the 6GHz band are blocked by firmware for some countries pending adoption of spectrum. Refer to Aruba DRT release notes for details.

México

La operación de este equipo está sujeta a las siguientes dos condiciones: (1) es posible que este equipo o dispositivo no cause interferencia perjudicial y (2) este equipo o dispositivo debeaceptar cualquier interferencia, incluyendo la que pueda causar su operación no deseada.

Нормативные требования Евhразийского Экономического Союза

Russia

HPE Russia: ООО "Хьюлетт Паккард Энтерпрайз" Российская Федерация, 125171, г. Москва, Ленинградское шоссе, 16А, стр.3, Телефон: +7 499 403 4248 Факс: +7 499 403 4677

'HPE Kazakhstan': ТОО «Хьюлетт-Паккард (К)», Республика Казахстан, 050040, г. Алматы, Бостандыкский район, проспект Аль-Фараби, 77/7, Телефон/факс: + 7 727 355 35 50

Kazakhstan

ЖШС "Хьюлетт Паккард Энтерпрайз" Ресей Федерациясы, 125171, Мәскеу, Ленинград тас жолы, 16А блок 3, Телефон: +7 499 403 4248 Факс: +7 499 403 4677

ЖШС «Хьюлетт-Паккард (К)», Қазақстан Республикасы, 050040, Алматы к., Бостандык ауданы, Әл-Фараби даңғ ылы, 77/7, Телефон/факс: +7 (727) 355 35 50

Ukraine

Hereby, Hewlett Packard Enterprise Company declares that the radio equipment type [The Regulatory Model Number [RMN] for this device can be found in the Regulatory Information section of this document] is in compliance with Ukrainian Technical Regulation on Radio Equipment, approved by resolution of the CABINET OF MINISTERS OF UKRAINE dated May 24, 2017, No. 355. The full text of the UA declaration of conformity is available at the following internet address: https://certificates.ext.hpe.com/public/certificates.html.

Х'ЮЛЕТТ ПАКАРД ЕНТЕРПРАЗ, 6280 АМЕРИКА ЦЕНТР Д-Р, САН-ХОСЕ, КАЛІФОРНІЯ 95002, США

Taiwan

第十二條

經型式認證合格之低功率射頻電機，非經許可，公司，商號或使用者均不得擅自變更頻率、加大功率或變更原設計之特性及功能。

第十四條

低功率射頻電機之使用不得影響飛航安全及干擾合法通信；經發現有干擾現象時，應立即停用，並改善至無干擾時方得繼續使用。

前項合法通信，指依電信法規定作業之無線電通信。低功率射頻電機須忍受合法通信或工業、科學及醫療用電波輻射性電機設備之干擾。

1. 應避免影響附近雷達系統之操作。

2.高增益指向性天線只得應用於固定式點對點系統

3.電磁波暴露量 MPE 標準值 1 mW/cm2, 送測產品實測值為 :0.1337mW/cm^2

UKCA

EU & UK Regulatory Contact:

HPE, Postfach 0001,1122 Wien, Austria

United States

This equipment has been tested and found to comply with the limits for a Class B digital device, pursuant to Part 15 of the FCC Rules. These limits are designed to provide reasonable protection against harmful interference in a residential installation. This equipment generates, uses and can radiate radio frequency energy and, if not installed and used in accordance with the manufacturer's instructions, may cause harmful interference to radio communications. However, there is no guarantee that interference will not occur in a particular installation. If this equipment does cause harmful interference to radio or television reception, which can be determined by turning the equipment off and on, the user is encouraged to try to correct the interference by one or more of the following measures

- Reorient or relocate the receiving antenna.
- Increase the separation between the equipment and receiver.
- Connect the equipment to an outlet on a circuit different from that to which the receiver is connected.
- Consult the dealer or an experienced radio or TV technician for help.

Improper termination of access points installed in the United States configured to a non-US model controller is a violation of the FCC grant of equipment authorization. Any such willful or intentional violation may result in a requirement by the FCC for immediate termination of operation and may be subject to forfeiture (47 CFR 1.80).

The network administrator(s) is/are responsible for ensuring that this device operates in accordance with local/regional laws of the host domain.

FCC regulations restrict the operation of this device to indoor use only.

CAUTION

The operation of this device is prohibited on oil platforms, cars, trains, boths, and aircraft, except that operation of this device is permitted in large aircraft while flying above 10,000 feet.

Operation in the 5.9725-7.125GHz band is prohibited for control or communication with unnamed aircraft systems.